Product Information Sheet

PPR Series

PPR Wheel (Middle Tube Pearlescent Dark Gray) Wheel Diameter × Wheel Width 125 × 31mm

A

KS-12022605131473

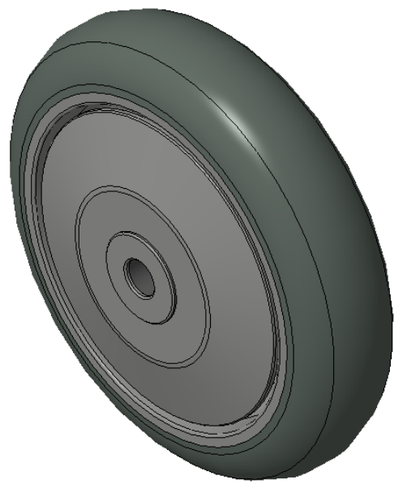

Picture may differ from original product

Easy to Floor Surface Preservation, Non-Markings, Easy To Maneuver, and can withstand heavy loads.
Low rolling and Swivel Resistance, resistant to corrosion from many corrosive substances.
Color: Pearlescent dark gray, with Dust Cap, Plain Bearing.

Wheel Center: High-quality impact-resistant polypropylene
Outer packaging: Thermoplastic rubber elastomer (TPR)
Bearing: Center tube type

Drawings are for reference only and may differ from the product

Technical Data

◉ Imperial ○ Metric

Wheel Diameter(D)	5 "
Wheel Width(T2)	1-1/4 "
Wheel Bearing	Plain Bearing
Axle Bore(d)	3/8 "
Axle Bore(S)	—
Bearing Bore Depth(t)	—
Hub Lenth(T1)	1-11/16 "
Hardness Of Tread	82±5° Shore A
Load Capacity (Dynamic)	220lbs
Load Capacity (Static)	331lbs
Temperature	-4°F to +140°F
Electrical Conductivity	N/A
Anti-Static	N/A
Weight	0.6lbs
Standard	ISO22883

Advantages at a glance

Rolling Resistance	● ● ● ● ○
Operating Noise	● ● ● ● ○
Floor Surface Preservation	● ● ● ● ●

2D Dimensional Drawing of Single Wheel

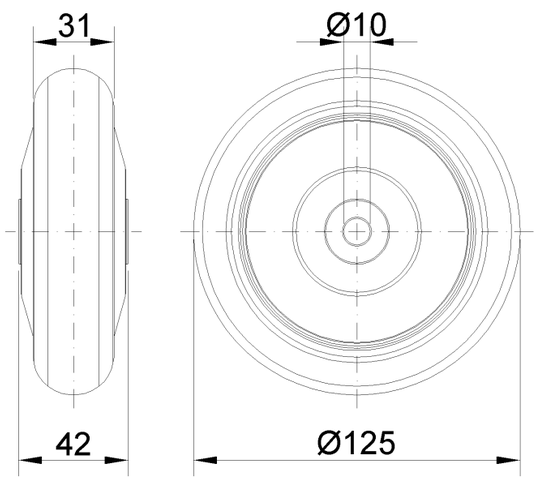

* For any deviation between metric and imperial spec, please refer to the metric spec.

© Copyright 2025 DershengInternational www.dersheng.com