Product Information Sheet

Resolute Rubber Wheel Series

Resolute (Pearlescent Dark Gray Arc) Wheel Diameter × Wheel Width 150 × 31mm

A

KS-12024506133773

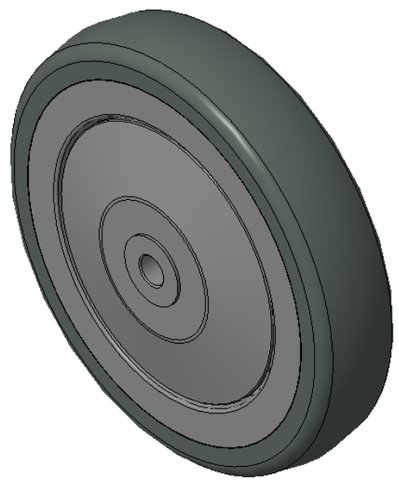

Picture may differ from original product

Easy to Floor Surface Preservation, Non-Markings, Easy To Maneuver, and can withstand heavy loads.
Low rolling and Swivel Resistance, resistant to corrosion from many corrosive substances.
Color: Pearlescent dark gray, includes bearing and Dust Cap.

Wheel Center: High-quality impact-resistant polypropylene
Outer packaging: Thermoplastic rubber elastomer (TPR)
Bearing: Ball bearing

Drawings are for reference only and may differ from the product

Technical Data

◉ Imperial ○ Metric

Wheel Diameter(D)	6 "
Wheel Width(T2)	1-1/4 "
Wheel Bearing	Ball Bearing
Axle Bore(d)	3/8 "
Axle Bore(S)	—
Bearing Bore Depth(t)	—
Hub Lenth(T1)	1-11/16 "
Hardness Of Tread	72±5° Shore A
Load Capacity (Dynamic)	324lbs
Load Capacity (Static)	486lbs
Temperature	-4°F to +140°F
Electrical Conductivity	N/A
Anti-Static	N/A
Weight	0.9lbs
Standard	ISO22883

Advantages at a glance

Rolling Resistance	● ● ● ● ●
Operating Noise	● ● ● ● ●
Floor Surface Preservation	● ● ● ● ●

2D Dimensional Drawing of Single Wheel

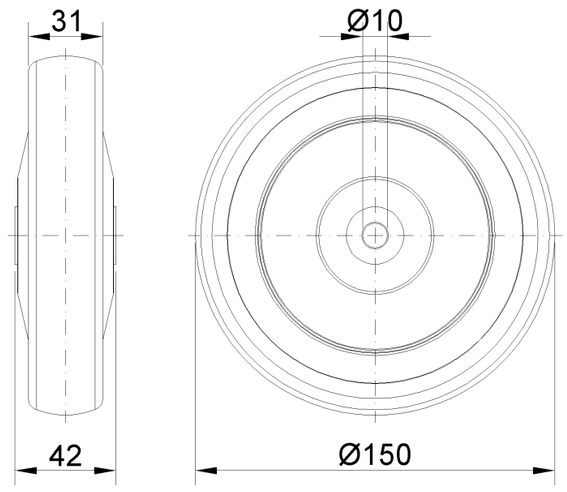

* For any deviation between metric and imperial spec, please refer to the metric spec.

© Copyright 2025 DershengInternational www.dersheng.com