Product Data Sheet

HDR & WHDR Series

WHDR (pearl light gray) Wheel Diameter x Wheel Width 150 x 50mm

A

KS-1202500620W175

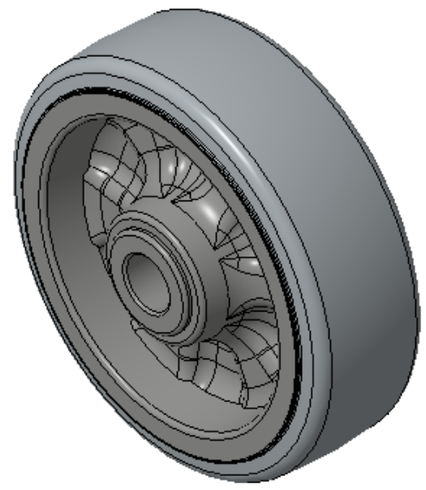

Picture may differ from original product

Easy to Floor Surface Preservation, Non-Markings, Easy To Maneuver, and can withstand heavy loads.
Low rolling and Swivel Resistance, resistant to corrosion from many corrosive substances.
Color: Pearlescent light gray, with Telling bearing.

Wheel Tread: High-quality impact-resistant polypropylene
Outer packaging: Thermoplastic rubber elastomer (TPR)
Bearings: Telling Bearings

Drawings are for reference only and may differ from the product

Technical Data

◉ Imperial ○ Metric

Wheel Diameter(D)	151mm
Wheel Width(T2)	50mm
Wheel Bearing	Without Bearing
Axle Bore(d)	20.4mm
Axle Bore(S)	— mm
Bearing Bore Depth(t)	—
Hub Lenth(T1)	61mm
Hardness Of Tread	95±5° Shore A
Load Capacity (Dynamic)	408kgs
Load Capacity (Static)	612kgs
Temperature	-20°C to +60°C
Electrical Conductivity	N/A
Anti-Static	N/A
Weight	0.73kgs
Standard	ISO22883

Advantages at a glance

Rolling Resistance	● ● ● ● ●
Operating Noise	● ● ● ○ ○
Floor Surface Preservation	● ● ● ○ ○

2D Dimensional Drawing of Single Wheel

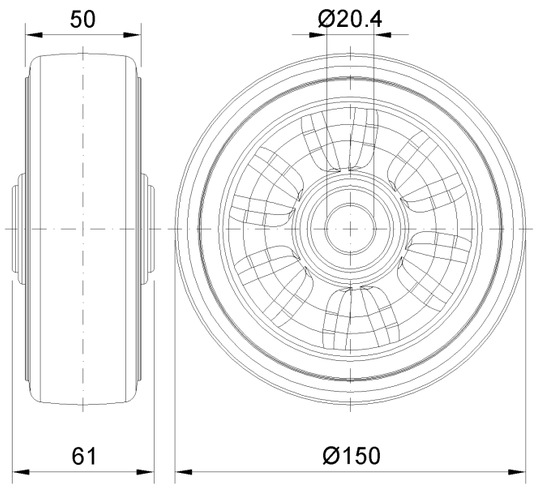

* For any deviation between metric and imperial spec, please refer to the metric spec.

© Copyright 2025 DershengInternational www.dersheng.com