Product Data Sheet

1109-HD American Mechanical Wheel Series

ZQPU Wheel Diameter × Wheel Width 50 x 20mm

EAN

TW-4110902002010

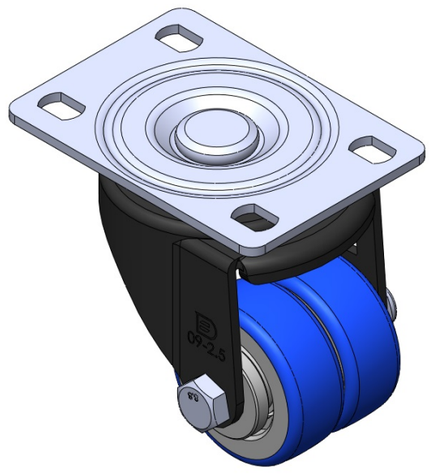

Picture may differ from original product

Swivel Casters, Riveted and Stamping Top Plate with high-grade perforated holes. Zine-Plated Top Plate, electroplated Top Plate, plate-mounted Mounting Type system. Cast Iron Wheel Center, High Quality Polyurethane Wheel Tread. Blue finish, Ball Bearings.

Wheel Tread: Hhigh-Quality Polyurethane

Wheel Center: Iron core / Cast iron core

Drawings are for reference only and may differ from the product

Technical Data

◉ Metric ○ Imperial

Wheel Diameter	50mm
Wheel Width	25mm
Wheel Bearing	Wheels With Ball Bearings
Plate Size	96 x 69mm
Bolt Hole Spacing	75 x 45mm
Plate Hole	13 x 9mm
Offset	27mm
Swivel Interference	104mm
Overall Height	87mm
Swivel Radius	52mm
Hardness Of Tread	87±5° Shore A
Load Capacity (Dynamic)	350kgs
Load Capacity (Static)	525kgs
Temperature	-20°C to +70°C
Fork Type	Swivel Caster
Stainless	N/A
Electrical Conductivity	N/A
Anti-Static	N/A
Weight	0.70kgs
Standard	ISO22883

Advantages at a glance

Rolling Resistance	● ● ● ● ●
Operating Noise	● ● ● ● ●
Floor Surface Preservation	● ● ● ● ●

Dimensions

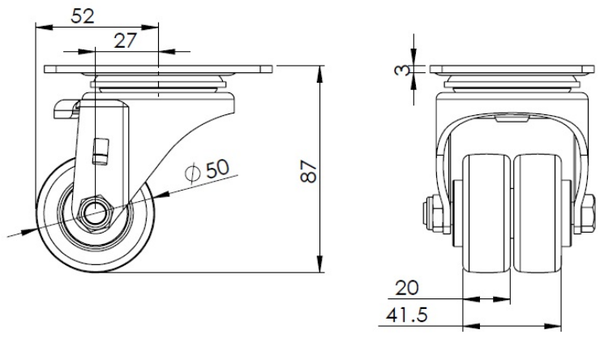

Mounting

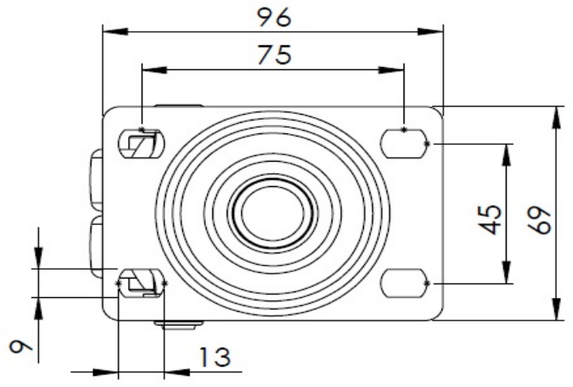

* For any deviation between metric and imperial spec, please refer to the metric spec.

© Copyright 2026 DershengInternational www.dersheng.com