Product Data Sheet

1109-HD American Mechanical Wheel Series

ZQPU Wheel Diameter × Wheel Width 50 x 20mm

EAN

TW-4110902002010

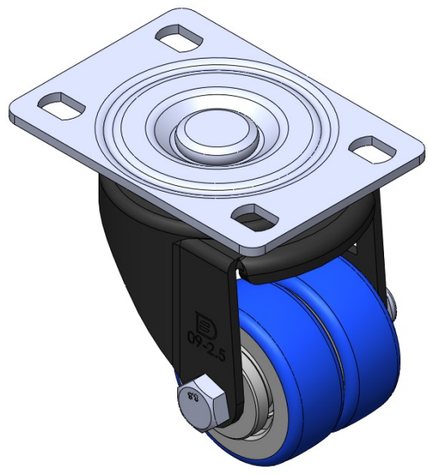

Picture may differ from original product

Swivel Casters, Riveted and Stamping Top Plate with high-grade perforated holes. Zine-Plated Top Plate, electroplated Top Plate, plate-mounted Mounting Type system. Cast Iron Wheel Center, High Quality Polyurethane Wheel Tread. Blue finish, Ball Bearings.

Wheel Tread: Hhigh-Quality Polyurethane

Wheel Center: Iron core / Cast iron core

Drawings are for reference only and may differ from the product

Technical Data

◉ Imperial ○ Metric

Wheel Diameter	2 "
Wheel Width	1 "
Wheel Bearing	Wheels With Ball Bearings
Plate Size	3-7/8 " x 2-3/4 "
Bolt Hole Spacing	3 " x 1-13/16 "
Plate Hole	9/16 " x 23/64 "
Offset	1-1/16 "
Swivel Interference	4-1/8 "
Overall Height	3-1/2 "
Swivel Radius	1-15/16 "
Hardness Of Tread	87±5° Shore A
Load Capacity (Dynamic)	772lbs
Load Capacity (Static)	1157lbs
Temperature	-4°F to +158°F
Fork Type	Swivel Caster
Stainless	N/A
Electrical Conductivity	N/A
Anti-Static	N/A
Weight	1.5lbs
Standard	ISO22883

Advantages at a glance

Rolling Resistance	● ● ● ● ●
Operating Noise	● ● ● ● ●
Floor Surface Preservation	● ● ● ● ●

Dimensions

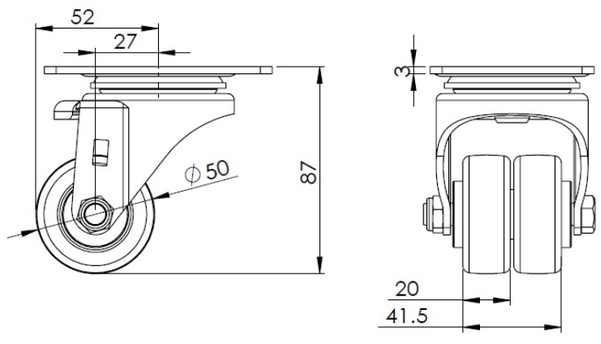

Mounting

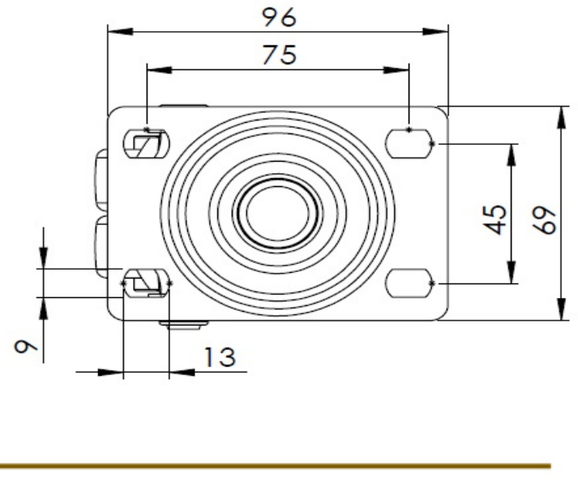

* For any deviation between metric and imperial spec, please refer to the metric spec.

© Copyright 2026 DershengInternational www.dersheng.com