Product Information Sheet

1109-HD American Mechanical Wheel Series

King Kong Wheel Diameter × Wheel Width 63 x 45mm

EAN

TW-4110902052022

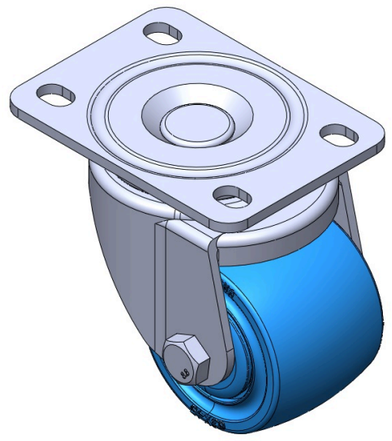

Picture may differ from original product

Portable Casters, Riveted and Stamping Top Plate with high-grade perforated holes. Zine-Plated Top Plate, electroplated Top Plate, plate-mounted Mounting Type device. Reinforced Polypropylene Wheel Center and rim. Blue Bearing—Ball Bearings.

Wheel surface: thermoplastic

Wheel Center: thermoplastic

Drawings are for reference only and may differ from the product

Technical Data

◉ Imperial ○ Metric

Wheel Diameter	2-1/2 "
Wheel Width	1-13/16 "
Wheel Bearing	Wheels With Ball Bearings
Plate Size	3-7/8 " x 2-3/4 "
Bolt Hole Spacing	3 " x 1-13/16 "
Plate Hole	9/16 " x 23/64 "
Offset	1-1/16 "
Swivel Interference	4-5/8 "
Overall Height	3-3/4 "
Swivel Radius	2-5/16 "
Hardness Of Tread	75±5° Shore D
Load Capacity (Dynamic)	992lbs
Load Capacity (Static)	1488lbs
Temperature	-4°F to +176°F
Fork Type	Swivel Caster
Stainless	N/A
Electrical Conductivity	N/A
Anti-Static	N/A
Weight	1.5lbs
Standard	ISO22883

Advantages at a glance

Rolling Resistance	● ● ● ● ●
Operating Noise	● ● ○ ○ ○
Floor Surface Preservation	● ● ○ ○ ○

Dimensions

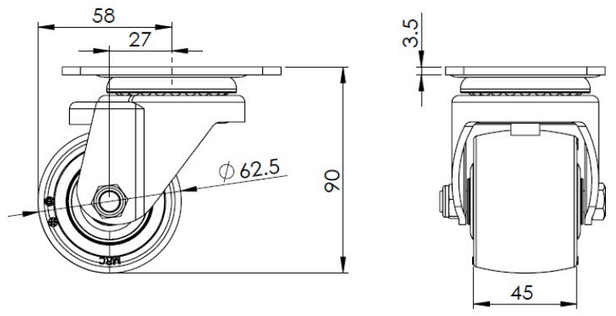

Mounting

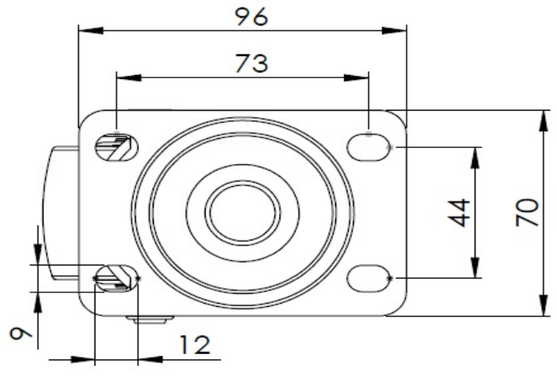

* For any deviation between metric and imperial spec, please refer to the metric spec.

© Copyright 2026 DershengInternational www.dersheng.com