Product Data Sheet

1109-HD American Mechanical Wheel Series

ZQPU Wheel Diameter × Wheel Width 75 x 41.5mm

EAN

TW-4110903002026

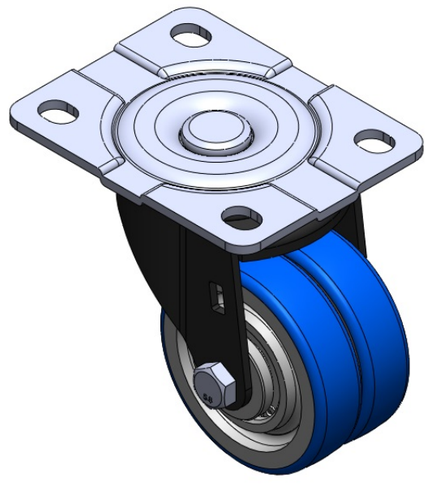

Picture may differ from original product

Portable Casters, Riveted and Stamping Top Plate; Zine-Plated Top Plate, electroplated Top Plate, Mounting Type - Top Plate device; cast iron Wheel Center, High Quality Polyurethane Wheel Tread; blue color, Bearing—Ball Bearings.

Wheel surface: High-quality polyurethane

Wheel Center: Iron core / Cast iron core

Drawings are for reference only and may differ from the product

Technical Data

◉ Imperial ○ Metric

Wheel Diameter	3 "
Wheel Width	1-11/16
Wheel Bearing	Wheels With Ball Bearings
Plate Size	4-3/8 " x 3-7/16 "
Bolt Hole Spacing	2-1/4 " x 2-3/8 "
Plate Hole	9/16 " x 3/8 "
Offset	1-1/4 "
Swivel Interference	5-1/2 "
Overall Height	4-1/4 "
Swivel Radius	2-3/4 "
Hardness Of Tread	87±5° Shore A
Load Capacity (Dynamic)	992lbs
Load Capacity (Static)	1488lbs
Temperature	-4°F to +158°F
Fork Type	Swivel Caster
Stainless	N/A
Electrical Conductivity	N/A
Anti-Static	N/A
Weight	1.8lbs
Standard	ISO22883

Advantages at a glance

Rolling Resistance	● ● ● ● ●
Operating Noise	● ● ● ● ●
Floor Surface Preservation	● ● ● ● ●

Dimensions

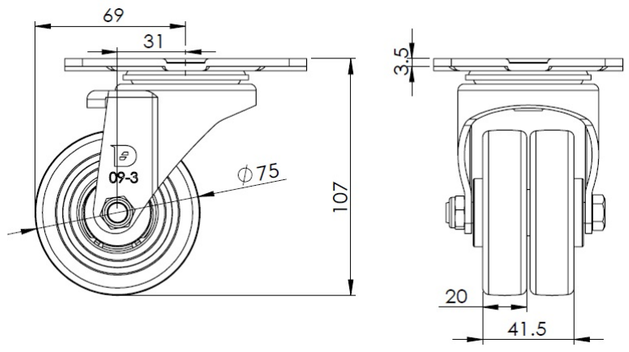

Mounting

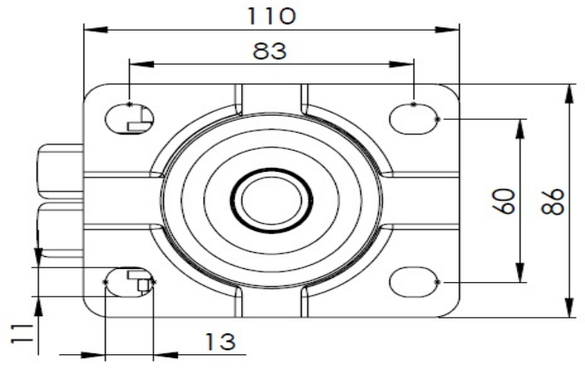

* For any deviation between metric and imperial spec, please refer to the metric spec.

© Copyright 2026 DershengInternational www.dersheng.com