Product Data Sheet

1112 2" Wide General Purposes Caster Series

PU (red) Wheel Diameter × Wheel Width 200 x 49mm

EAN

TW-4111208002026

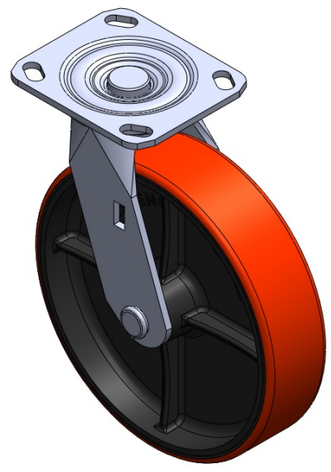

Picture may differ from original product

Portable Casters, Welded Caster Fork Electroplated surface, Mounting Type - Top Plate device Cast Iron Wheel Center, High Quality Polyurethane Wheel Tread Red, Bearing—Annual Ball Bearings.

Wheel surface: High-quality polyurethane

Wheel Center: Iron core/Cast iron core

Drawings are for reference only and may differ from the product

Technical Data

◉ Metric ○ Imperial

Wheel Diameter	200mm
Wheel Width	49mm
Wheel Bearing	Wheel With Annual Ball Bearing
Plate Size	115 x 100mm
Bolt Hole Spacing	85 x 70mm
Plate Hole	20 x 11mm
Offset	45mm
Swivel Interference	290mm
Overall Height	240mm
Swivel Radius	145mm
Hardness Of Tread	93±5° Shore A
Load Capacity (Dynamic)	420kgs
Load Capacity (Static)	630kgs
Temperature	-20°C to +70°C
Fork Type	Swivel Caster
Stainless	N/A
Electrical Conductivity	N/A
Anti-Static	N/A
Weight	4.20kgs
Standard	ISO22883

Advantages at a glance

Rolling Resistance	● ● ● ○ ○
Operating Noise	● ● ● ● ○
Floor Surface Preservation	● ● ● ● ○

Dimensions

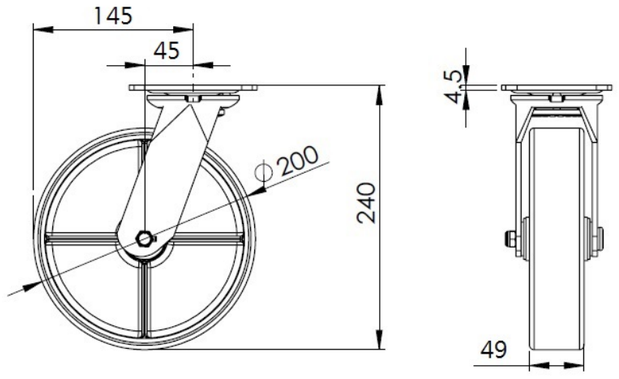

Mounting

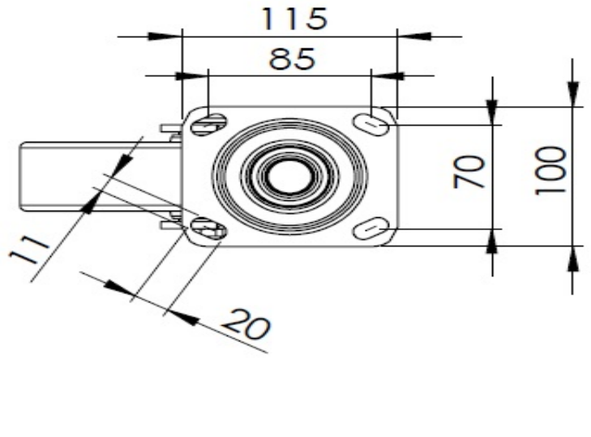

* For any deviation between metric and imperial spec, please refer to the metric spec.

© Copyright 2026 DershengInternational www.dersheng.com