Product Data Sheet

1112 2" Wide General Purposes Caster Series

PU (red) Wheel Diameter × Wheel Width 200 x 49mm

EAN

TW-4111208002026

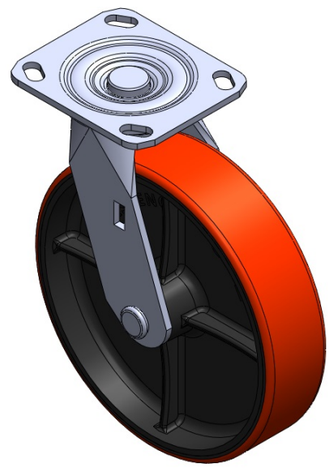

Picture may differ from original product

Portable Casters, Welded Caster Fork Electroplated surface, Mounting Type - Top Plate device Cast Iron Wheel Center, High Quality Polyurethane Wheel Tread Red, Bearing—Annual Ball Bearings.

Wheel surface: High-quality polyurethane

Wheel Center: Iron core/Cast iron core

Drawings are for reference only and may differ from the product

Technical Data

◉ Imperial ○ Metric

Wheel Diameter	8 "
Wheel Width	2 "
Wheel Bearing	Wheel With Annual Ball Bearing
Plate Size	4-9/16 " x 4 "
Bolt Hole Spacing	3-3/8 " x 2-3/4 "
Plate Hole	13/16 " x 3/8 "
Offset	1-13/16 "
Swivel Interference	11-1/2 "
Overall Height	9-1/2 "
Swivel Radius	5-13/16 "
Hardness Of Tread	93±5° Shore A
Load Capacity (Dynamic)	926lbs
Load Capacity (Static)	1389lbs
Temperature	-4°F to +158°F
Fork Type	Swivel Caster
Stainless	N/A
Electrical Conductivity	N/A
Anti-Static	N/A
Weight	9.3lbs
Standard	ISO22883

Advantages at a glance

Rolling Resistance	● ● ● ○ ○
Operating Noise	● ● ● ● ○
Floor Surface Preservation	● ● ● ● ○

Dimensions

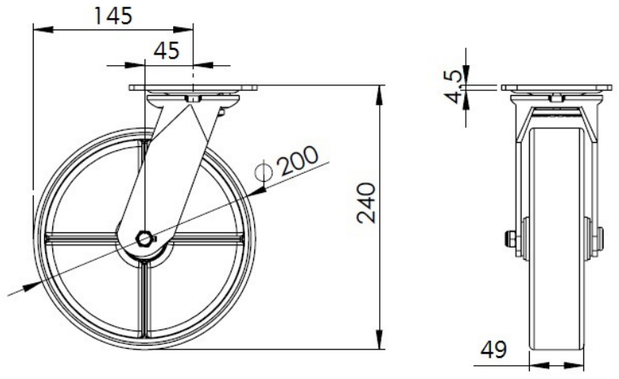

Mounting

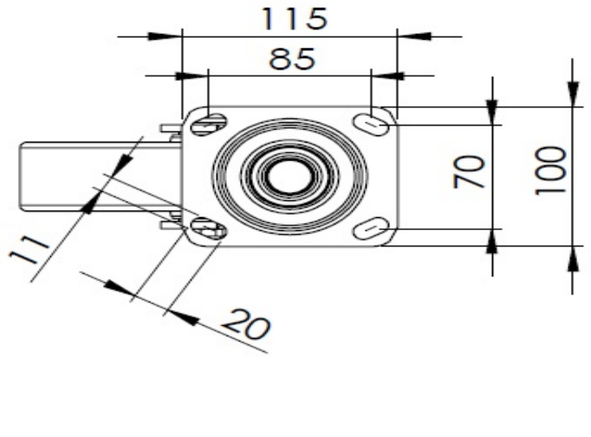

* For any deviation between metric and imperial spec, please refer to the metric spec.

© Copyright 2026 DershengInternational www.dersheng.com