Product Information Sheet

1116-SS-MI Medium Duty Institutional Stainless Steel Caster Series

Nylon Wheel Diameter × Wheel Width 100 x 31mm

EAN

TW-4111604001003

Rigid Casters, Stamping Fabricated Caster Fork — 72 x 53.5 mm (2-7/8" x 2-1/8") Bolt Hole Spacing Surface vibration, Mounting Type - Top Plate device Reinforced Polypropylene and Wheel Tread White, wheel — Plain Bearing.

Wheel surface: thermoplastic

Wheel Center: thermoplastic

Drawings are for reference only and may differ from the product

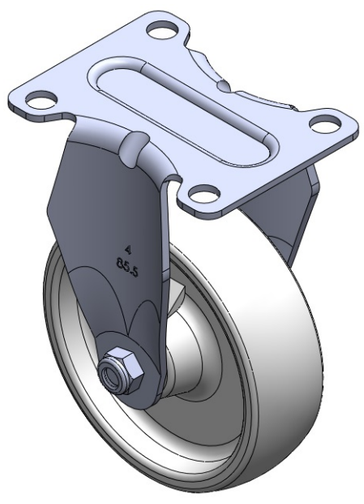

Picture may differ from original product

Technical Data

◉ Metric ○ Imperial

Wheel Diameter	100mm
Wheel Width	31mm
Wheel Bearing	Wheel With Plain Bearing
Plate Size	92 x 70mm
Bolt Hole Spacing	72 x 53mm
Plate Hole	10mm
Overall Height	136mm
Hardness Of Tread	75±5° Shore D
Load Capacity (Dynamic)	120kgs
Load Capacity (Static)	180kgs
Temperature	-20°C to +80°C
Fork Type	Rigid Caster
Stainless	Y
Electrical Conductivity	N/A
Anti-Static	N/A
Weight	0.45kgs
Standard	ISO22883

Advantages at a glance

Rolling Resistance	● ● ● ● ●
Operating Noise	● ● ○ ○ ○
Floor Surface Preservation	● ● ○ ○ ○

Dimensions

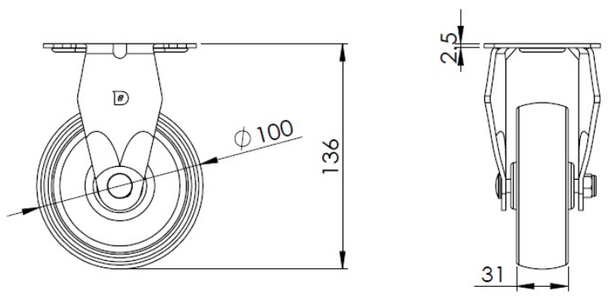

Mounting

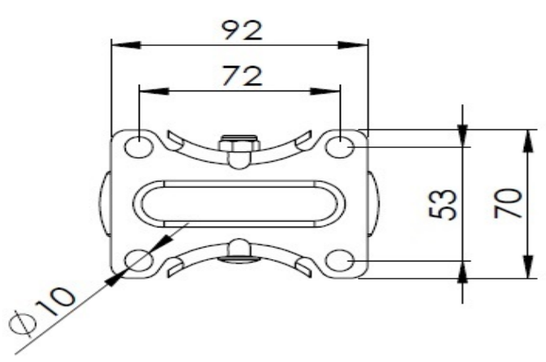

* For any deviation between metric and imperial spec, please refer to the metric spec.

© Copyright 2025 DershengInternational www.dersheng.com