Product Information Sheet

1116-SS-MI Medium Duty Institutional Stainless Steel Caster Series

Nylon Wheel Diameter × Wheel Width 100 x 31mm

EAN

TW-4111604001003

Rigid Casters, Stamping Fabricated Caster Fork — 72 x 53.5 mm (2-7/8" x 2-1/8") Bolt Hole Spacing Surface vibration, Mounting Type - Top Plate device Reinforced Polypropylene and Wheel Tread White, wheel — Plain Bearing.

Wheel surface: thermoplastic

Wheel Center: thermoplastic

Drawings are for reference only and may differ from the product

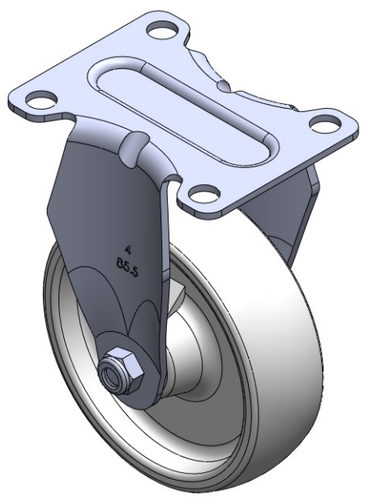

Picture may differ from original product

Technical Data

◉ Imperial ○ Metric

Wheel Diameter	4 "
Wheel Width	1-1/4 "
Wheel Bearing	Wheel With Plain Bearing
Plate Size	3-5/8 " x 2-13/16 "
Bolt Hole Spacing	2-7/8 " x 2-1/8 "
Plate Hole	3/8 "
Overall Height	5-7/16 "
Hardness Of Tread	75±5° Shore D
Load Capacity (Dynamic)	265lbs
Load Capacity (Static)	397lbs
Temperature	-4°F to +176°F
Fork Type	Rigid Caster
Stainless	Y
Electrical Conductivity	N/A
Anti-Static	N/A
Weight	1.0lbs
Standard	ISO22883

Advantages at a glance

Rolling Resistance	● ● ● ● ●
Operating Noise	● ● ○ ○ ○
Floor Surface Preservation	● ● ○ ○ ○

Dimensions

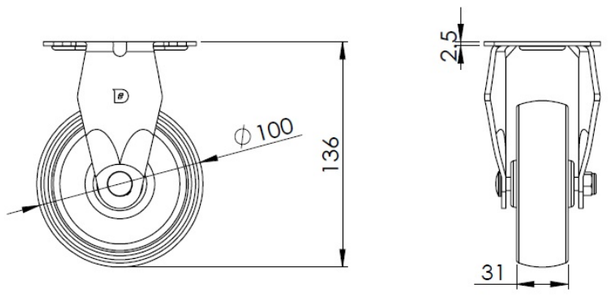

Mounting

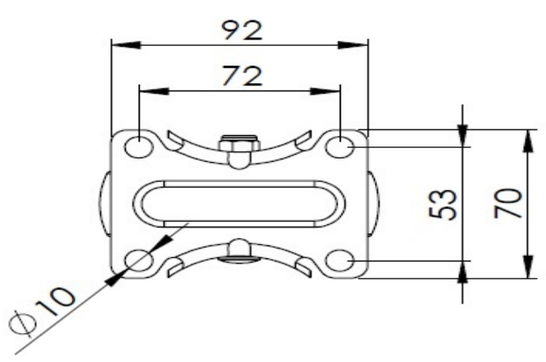

* For any deviation between metric and imperial spec, please refer to the metric spec.

© Copyright 2025 DershengInternational www.dersheng.com