Product Information Sheet

1116-SS-MI Medium Duty Institutional Stainless Steel Caster Series

PPR (S) Wheel Diameter × Wheel Width 100 x 31mm

EAN

TW-4111604002090

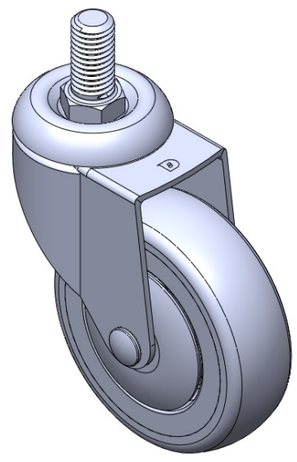

Picture may differ from original product

Portable Casters, Threaded Stem Stamping Fork—5/8"-11 teeth; surface vibration, Mounting Type - Threaded Stem; impact-resistant polypropylene Wheel Center, High-Quality Reinforced Polypropylene Rubber (TPR) Wheel Tread; gray; Bearing—Ball Bearings.

Wheel tread: Thermoplastic rubber elastomer (TPR)

Wheel Center: Made of high-quality impact-resistant polypropylene

Drawings are for reference only and may differ from the product

Technical Data

◉ Imperial ○ Metric

Wheel Diameter	4 "
Wheel Width	1-1/4 "
Wheel Bearing	Wheels With Ball Bearings
Threaded Stem	5/8 " -11
Threaded Length	1-5/16 "
Offset	1-5/8 "
Swivel Interference	7-1/4 "
Overall Height	5-5/16 "
Swivel Radius	3-5/8 "
Hardness Of Tread	82±5° Shore A
Load Capacity (Dynamic)	220lbs
Load Capacity (Static)	331lbs
Temperature	-4°F to +140°F
Fork Type	Swivel Caster
Stainless	Y
Electrical Conductivity	N/A
Anti-Static	N/A
Weight	1.5lbs
Standard	ISO22883

Advantages at a glance

Rolling Resistance	● ● ● ● ○
Operating Noise	● ● ● ● ○
Floor Surface Preservation	● ● ● ● ●

Dimensions

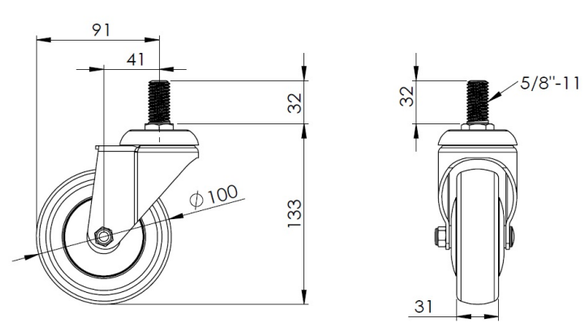

Mounting

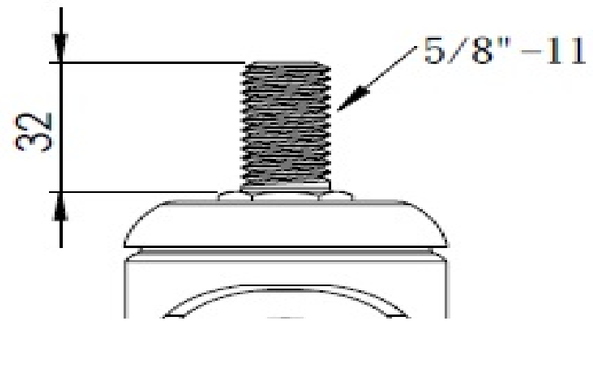

* For any deviation between metric and imperial spec, please refer to the metric spec.

© Copyright 2026 DershengInternational www.dersheng.com