Product Data Sheet

1129 Medical Caster Series

PU Wheel Diameter × Wheel Width 100 x 34mm

EAN

TW-4112904001031

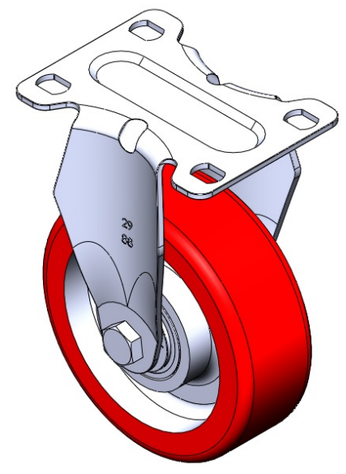

Picture may differ from original product

Rigid Caster with Stamping Fabricated Caster Fork and 75 x 45 mm (3" x 1-3/4") Bolt Hole Spacing.
Zine-Plated, Mounting Type - Top Plate.
Cast Iron core with High Quality Polyurethane Wheel Tread.
Red Cast Iron finish, Ball Bearings.

Wheel tread: Made of high-quality polyurethane

Wheel Center: iron core/cast iron core

Drawings are for reference only and may differ from the product

Technical Data

◉ Metric ○ Imperial

Wheel Diameter	100mm
Wheel Width	34mm
Wheel Bearing	Wheels With Ball Bearings
Plate Size	92 x 70mm
Bolt Hole Spacing	75 x 45mm
Plate Hole	12 x 9mm
Overall Height	136mm
Hardness Of Tread	93±5° Shore A
Load Capacity (Dynamic)	120kgs
Load Capacity (Static)	180kgs
Temperature	-20°C to +70°C
Fork Type	Rigid Caster
Stainless	N/A
Electrical Conductivity	N/A
Anti-Static	N/A
Weight	0.45kgs
Standard	ISO22883

Advantages at a glance

Rolling Resistance	● ● ● ○ ○
Operating Noise	● ● ● ● ○
Floor Surface Preservation	● ● ● ● ○

Dimensions

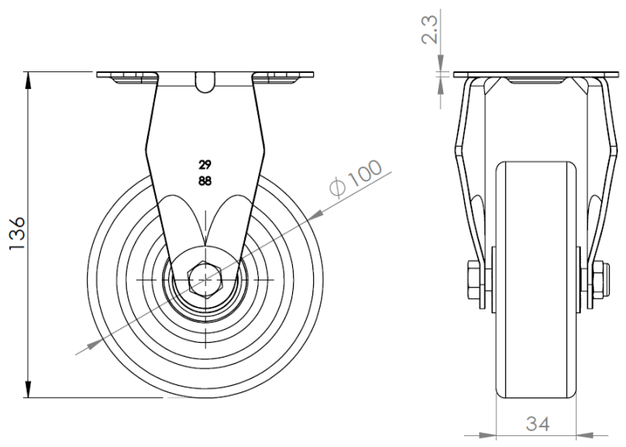

Mounting

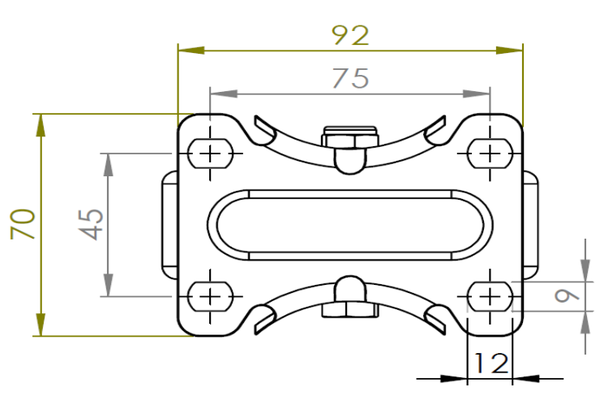

* For any deviation between metric and imperial spec, please refer to the metric spec.

© Copyright 2025 DershengInternational www.dersheng.com