Product Data Sheet

1129 Medical Caster Series

Nylon Wheel Diameter × Wheel Width 100 x 32mm

EAN

TW-4112904002049

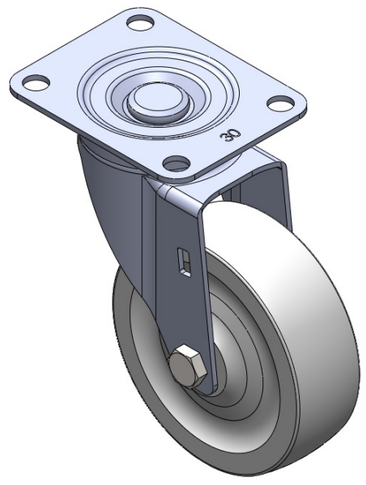

Picture may differ from original product

Swivel Caster, Top Plate Riveted and Stamping with 72 x 53.5 mm (2-7/8" x 2-1/8") Bolt Hole Spacing.
Zine-Plated, Mounting Type - Top Plate.
Reinforced Polypropylene and Wheel Tread.
Bearing - Plain Bearing.

Wheel surface: Thermoplastic plastic (PA6)
Wheel Center: Thermoplastic plastic (PA6)

Drawings are for reference only and may differ from the product

Technical Data

◉ Metric ○ Imperial

Wheel Diameter	100mm
Wheel Width	32mm
Wheel Bearing	Wheel With Plain Bearing
Plate Size	91 x 72.6mm
Bolt Hole Spacing	72 x 53mm
Plate Hole	10mm
Offset	40mm
Swivel Interference	180mm
Overall Height	139mm
Swivel Radius	90mm
Hardness Of Tread	75±5° Shore D
Load Capacity (Dynamic)	120kgs
Load Capacity (Static)	180kgs
Temperature	-20°C to +80°C
Fork Type	Swivel Caster
Stainless	N/A
Electrical Conductivity	N/A
Anti-Static	N/A
Weight	0.65kgs
Standard	ISO22883

Advantages at a glance

Rolling Resistance	● ● ● ● ●
Operating Noise	● ● ○ ○ ○
Floor Surface Preservation	● ● ○ ○ ○

Dimensions

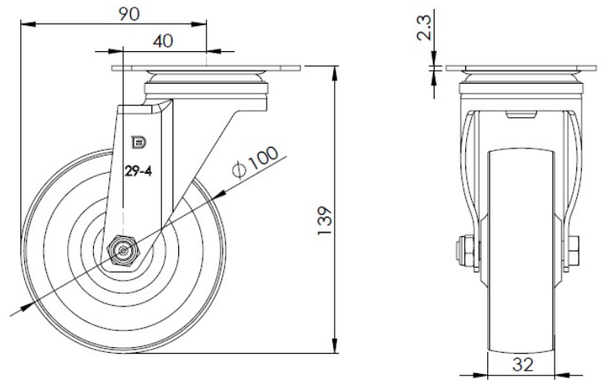

Mounting

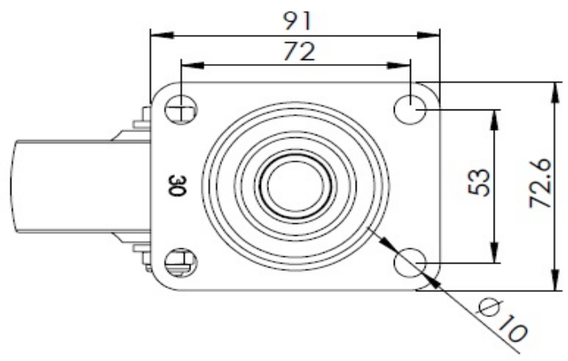

* For any deviation between metric and imperial spec, please refer to the metric spec.

© Copyright 2025 DershengInternational www.dersheng.com