Product Data Sheet

1130 Medium Duty General Purposes Caster Series

AQPU (brown) Wheel Diameter × Wheel Width 75 x 31mm

EAN

TW-4113003002025

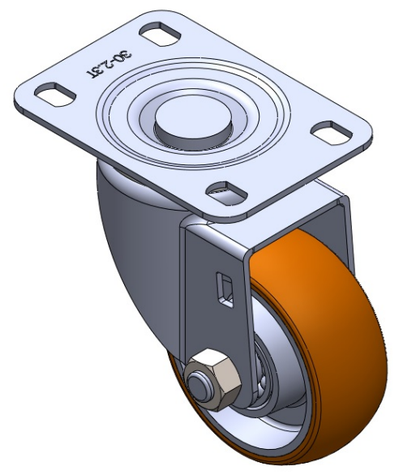

Picture may differ from original product

Swivel Caster with Riveted Fork and Stamping Fork – 75 x 45 mm (3" x 1-3/4") Bolt Hole Spacing Zine-Plated, Top Plateed Mounting Type Aluminum core with High Quality Polyurethane Wheel Tread Brown, Bearing – Ball Bearings.

Wheel tread: high quality polyurethane

Wheel Center: aluminum core

Drawings are for reference only and may differ from the product

Technical Data

◉ Imperial ○ Metric

Wheel Diameter	3 "
Wheel Width	1-1/4 "
Wheel Bearing	Wheels With Ball Bearings
Plate Size	3-7/8 " x 2-3/4 "
Bolt Hole Spacing	3 " x 1-13/16 "
Plate Hole	9/16 " x 23/64 "
Offset	1-3/8 "
Swivel Interference	5-13/16 "
Overall Height	4-1/4 "
Swivel Radius	2-15/16 "
Hardness Of Tread	92±5° Shore A
Load Capacity (Dynamic)	353lbs
Load Capacity (Static)	529lbs
Temperature	-4°F to +158°F
Fork Type	Swivel Caster
Stainless	N/A
Electrical Conductivity	N/A
Anti-Static	N/A
Weight	1.3lbs
Standard	ISO22883

Advantages at a glance

Rolling Resistance	● ● ● ● ●
Operating Noise	● ● ● ● ●
Floor Surface Preservation	● ● ● ● ●

Dimensions

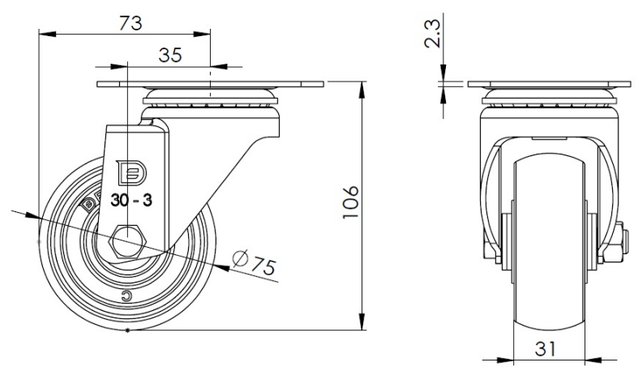

Mounting

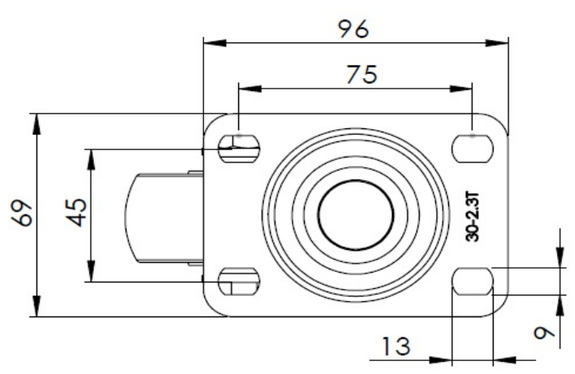

* For any deviation between metric and imperial spec, please refer to the metric spec.

© Copyright 2025 DershengInternational www.dersheng.com