Product Data Sheet

1153 Heavy Duty 2" Wide General Purposes Caster Series

W Resolute Wheel Diameter × Wheel Width 152 x 50mm

EAN

TW-4115306002026

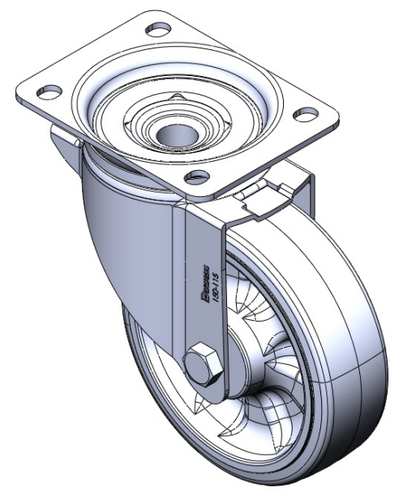

Picture may differ from original product

Swivel Caster with Riveted Fork and Stamping Fork.
Zine-Plated, Mounting Type - Top Plate.
Reinforced, impact-resistant polypropylene core with High-Quality Reinforced Polypropylene Rubber (TPR) Wheel Tread.
Dark gray, Ball Bearings.

Wheel tread: Thermoplastic rubber elastomer (TPR)

Wheel Center: Made of high-quality impact-resistant polypropylene

Drawings are for reference only and may differ from the product

Technical Data

◉ Metric ○ Imperial

Wheel Diameter	152mm
Wheel Width	50mm
Wheel Bearing	Wheels With Ball Bearings
Plate Size	137 x 105mm
Bolt Hole Spacing	105 x 77.5mm
Plate Hole	13.5 x 11mm
Offset	55mm
Swivel Interference	260mm
Overall Height	191mm
Swivel Radius	130mm
Hardness Of Tread	72±5° Shore A
Load Capacity (Dynamic)	272kgs
Load Capacity (Static)	408kgs
Temperature	-20°C to +60°C
Fork Type	Swivel Caster
Stainless	N/A
Electrical Conductivity	N/A
Anti-Static	N/A
Weight	2.00kgs
Standard	ISO22883

Advantages at a glance

Rolling Resistance	● ● ● ● ●
Operating Noise	● ● ● ● ●
Floor Surface Preservation	● ● ● ● ●

Dimensions

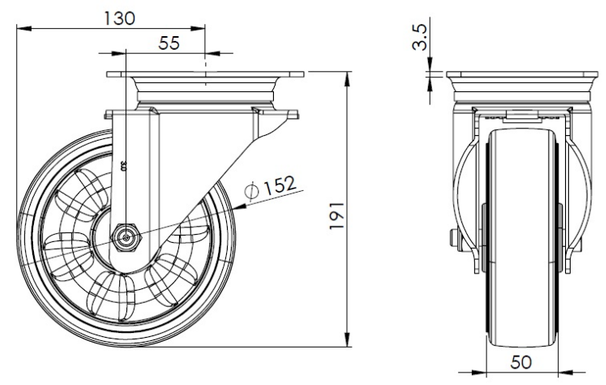

Mounting

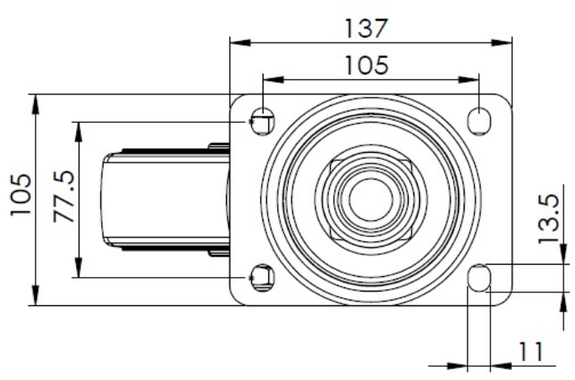

* For any deviation between metric and imperial spec, please refer to the metric spec.

© Copyright 2025 DershengInternational www.dersheng.com