Product Data Sheet

1153 Heavy Duty 2" Wide General Purposes Caster Series

NBR Wheel Diameter × Wheel Width 150 x 40 mm

EAN

TW-4115306002061

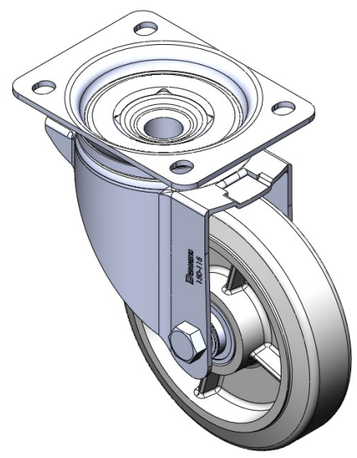

Picture may differ from original product

Swivel Caster with Riveted Fork and Stamping Fork.
Zine-Plated, Mounting Type - Top Plate.
Cast Iron core with High-Quality Resilient Rubber Wheel Tread.
Bearings—Ball Bearings.

Wheel surface: high-quality elastic rubber

Wheel Center: iron core/cast iron core

Drawings are for reference only and may differ from the product

Technical Data

◉ Metric ○ Imperial

Wheel Diameter	150mm
Wheel Width	40mm
Wheel Bearing	Wheels With Ball Bearings
Plate Size	137 x 105mm
Bolt Hole Spacing	105 x 77.5mm
Plate Hole	13.5 x 11mm
Offset	55mm
Swivel Interference	260mm
Overall Height	190mm
Swivel Radius	130mm
Hardness Of Tread	85±5° Shore A
Load Capacity (Dynamic)	150kgs
Load Capacity (Static)	225kgs
Temperature	-20°C to +80°C
Fork Type	Swivel Caster
Stainless	N/A
Electrical Conductivity	N/A
Anti-Static	N/A
Weight	3.00kgs
Standard	ISO22883

Advantages at a glance

Rolling Resistance	● ● ● ○ ○
Operating Noise	● ● ● ● ○
Floor Surface Preservation	● ● ● ● ○

Dimensions

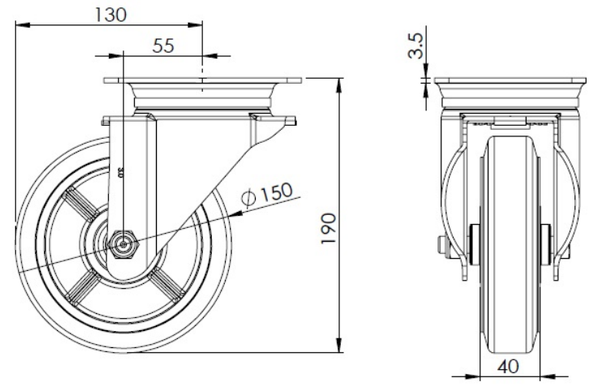

Mounting

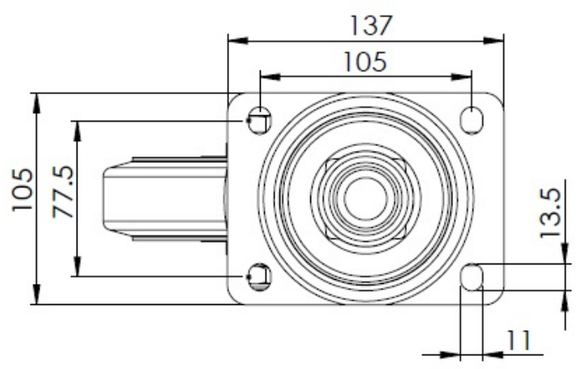

* For any deviation between metric and imperial spec, please refer to the metric spec.

© Copyright 2025 DershengInternational www.dersheng.com