Product Data Sheet

1109 Medium Duty/Low Profile Business Machine Caster Series

QPU (blue round) Wheel Diameter × Wheel Width 75 × 45mm

EAN

YJ-11090300532013

Swivel Caster with Riveted Fork and Stamping Fork – 75 x 45 mm (3" x 1-3/4") Bolt Hole Spacing Zine-Plated, Mounting Type - Top Plate Cast Iron Wheel Center, High Quality Polyurethane tread Blue color, Bearing – Ball Bearing.

Wheel surface: high quality polyurethane

Wheel Center: cast iron core

Drawings are for reference only and may differ from the product

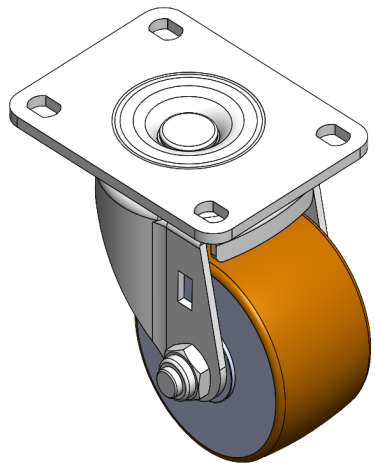

Picture may differ from original product

Technical Data

Metric ○ Imperial

Wheel Diameter	75mm
Wheel Width	45mm
Wheel Bearing	Wheels With Ball Bearings
Plate Size	104 x 80mm
Bolt Hole Spacing	81 x 59mm
Plate Hole	12 x 9mm
Offset	31mm
Swivel Interference	140mm
Overall Height	102mm
Swivel Radius	70mm
Hardness Of Tread	87±5° Shore A
Load Capacity (Dynamic)	450kgs
Load Capacity (Static)	675kgs
Temperature	-20°C to +70°C
Fork Type	Swivel Caster
Stainless	N/A
Electrical Conductivity	N/A
Anti-Static	N/A
Weight	1.40kgs

Advantages at a glance

Rolling Resistance	● ● ● ● ●
Operating Noise	● ● ● ● ●
Floor Surface Preservation	● ● ● ● ●

Dimensions

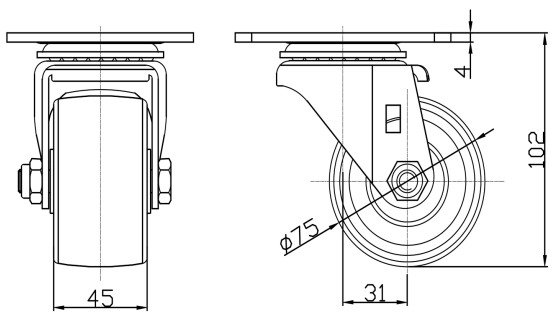

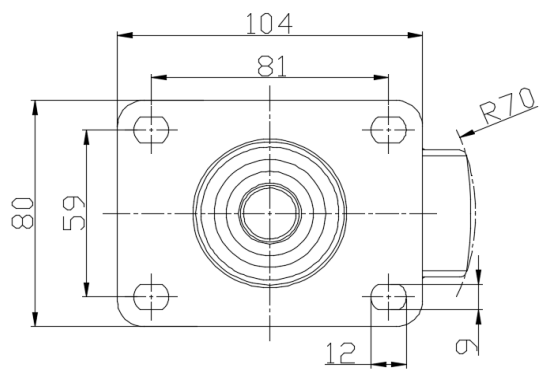

* For any deviation between metric and imperial spec, please refer to the metric spec.

© Copyright 2026 DershengInternational www.dersheng.com