Product Information Sheet

1121 Double Raceway, Light Duty Caster Series

Rubber Wheel (Diameter × Width 40×17mm)

EAN

YJ-11210150065213

Portable Casters, Threaded Stem Stamping Fork—3/8"-16 teeth
Zine-Plated surface, Mounting Type - Threaded Stem device
Reinforced Polypropylene, High-Quality Resilient Rubber Wheel Tread
Black, wheels—Plain Bearing.

Wheel surface: High-quality elastic rubber
Wheel Center: Thermoplastic (PA6)

Drawings are for reference only and may differ from the product

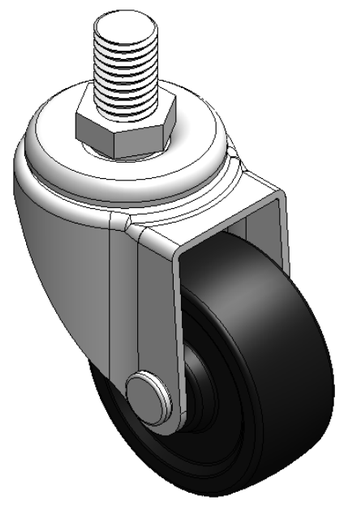

Picture may differ from original product

Technical Data

◉ Imperial ○ Metric

Wheel Diameter	1-5/8
Wheel Width	11/16 "
Wheel Bearing	Wheel With Plain Bearing
Threaded Stem	3/8 " -16牙
Threaded Length	5/8 "
Offset	3/4 "
Swivel Interference	3-1/16 "
Overall Height	2-7/16 "
Swivel Radius	1-11/16 "
Hardness Of Tread	80±5° Shore A
Load Capacity (Dynamic)	44lbs
Load Capacity (Static)	66lbs
Temperature	-4°F to +248°F
Fork Type	Swivel Caster
Stainless	N/A
Electrical Conductivity	N/A
Anti-Static	N/A
Weight	0.3lbs
Standard	ISO22883

Advantages at a glance

Rolling Resistance	● ● ● ○ ○
Operating Noise	● ● ● ● ○
Floor Surface Preservation	● ● ● ● ○

Dimensions

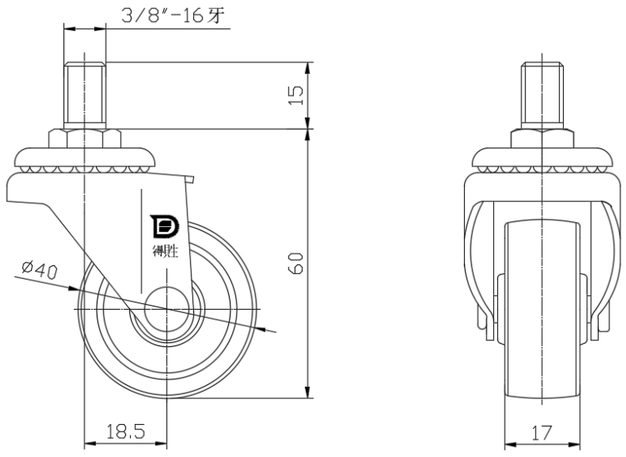

Mounting

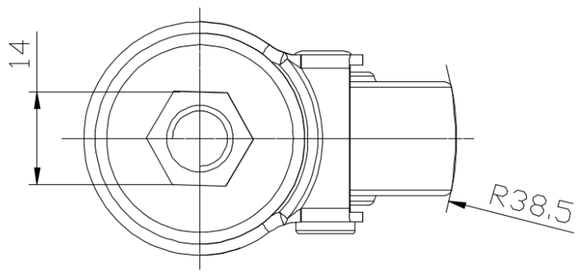

* For any deviation between metric and imperial spec, please refer to the metric spec.

© Copyright 2026 DershengInternational www.dersheng.com