Product Data Sheet

1138 38 Series Central Locking Caster Series

DERSHENG
Dersheng Casters Keep Rolling

Resolute (Pearlescent dark gray) Wheel Diameter x Wheel Width 125 x 31mm

EAN

YJ-11380500458020

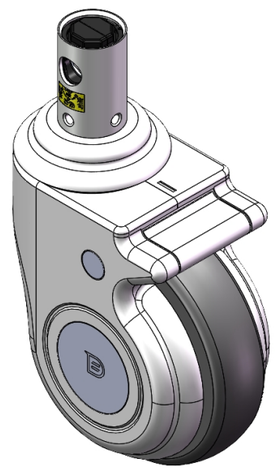

Picture may differ from original product

Short Stem Central Locking, full locking or fixed system castor. Single Bolthole Riveted Stamping Fork Surface Zine-Plated, Mounting Type - Single Bolthole Impact resistant High-quality Impact Resistance Polypropylene Wheel Center,High-Quality Thermoplastic Rubber (TPR) Wheel Tread Pearl dark grey, Bearing - Ball Bearings.

Wheel tread: Thermoplastic rubber elastomer (TPR)

Wheel Center: Made of high-quality impact-resistant polypropylene

Drawings are for reference only and may differ from the product

Technical Data

◉ Metric ○ Imperial

Wheel Diameter	125mm
Wheel Width	31mm
Wheel Bearing	Wheels With Ball Bearings
Diameter	32mm
Stem Hole Spec	50mm
Offset	35.5mm
Swivel Interference	196mm
Overall Height	162mm
Swivel Radius	98mm
Hardness Of Tread	82±5° Shore A
Load Capacity (Dynamic)	147kgs
Load Capacity (Static)	220.5kgs
Temperature	-20°C to +60°C
Fork Type	Swivel Caster With Total Brake
Stainless	N/A
Electrical Conductivity	N/A
Anti-Static	N/A
Weight	1.17kgs
Standard	ISO22881

Advantages at a glance

Rolling Resistance	● ● ● ● ○
Operating Noise	● ● ● ● ○
Floor Surface Preservation	● ● ● ● ●

Dimensions

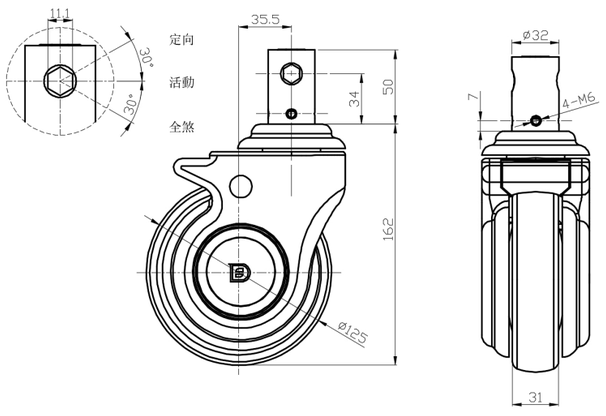

Mounting

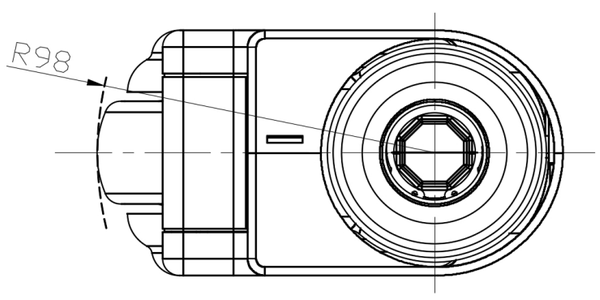

* For any deviation between metric and imperial spec, please refer to the metric spec.

© Copyright 2025 DershengInternational www.dersheng.com