Product Data Sheet

1138 38 Series Central Locking Caster Series

DERSHENG
Dersheng Casters Keep Rolling

Resolute (Pearlescent dark gray) Wheel Diameter x Wheel Width 125 x 31mm

EAN

YJ-11380500458050

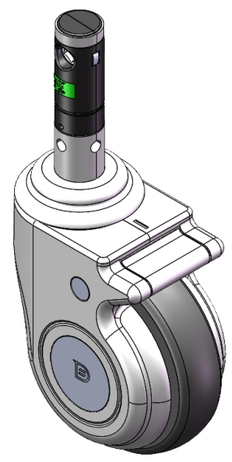

Picture may differ from original product

Long Stem Central Locking, Total Brake castor. Single Bolthole riveting Press-Pressed Fork Surface zinc-plated, Mounting Type - Single Bolthole High-quality Impact Resistance Polypropylene Wheel Center,High-Quality Thermoplastic Rubber (TPR) Wheel Tread Pearl-finish dark grey, Bearing - Ball Bearing.

Wheel tread: Thermoplastic rubber elastomer (TPR)

Wheel Center: Made of high-quality impact-resistant polypropylene

Drawings are for reference only and may differ from the product

Technical Data

◉ Imperial ○ Metric

Wheel Diameter	5 "
Wheel Width	1-1/4 "
Wheel Bearing	Wheels With Ball Bearings
Diameter	1-1/8 "
Stem Hole Spec	3-7/8 "
Offset	1-7/16 "
Swivel Interference	7-13/16 "
Overall Height	6-1/2 "
Swivel Radius	3-15/16 "
Hardness Of Tread	82±5° Shore A
Load Capacity (Dynamic)	324lbs
Load Capacity (Static)	486lbs
Temperature	-4°F to +140°F
Fork Type	Swivel Caster With Total Brake
Stainless	N/A
Electrical Conductivity	N/A
Anti-Static	N/A
Weight	2.8lbs
Standard	ISO22881

Advantages at a glance

Rolling Resistance	● ● ● ● ○
Operating Noise	● ● ● ● ○
Floor Surface Preservation	● ● ● ● ●

Dimensions

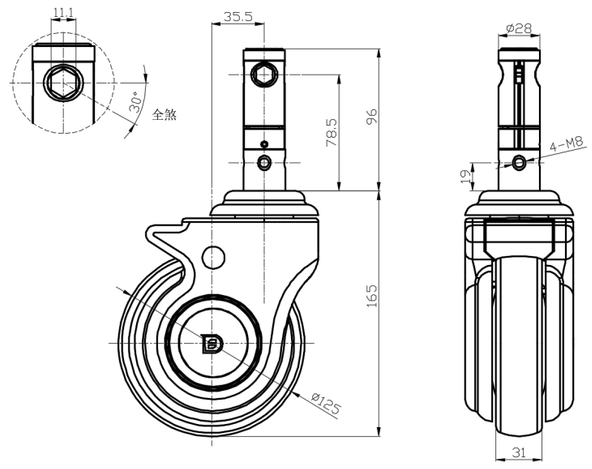

Mounting

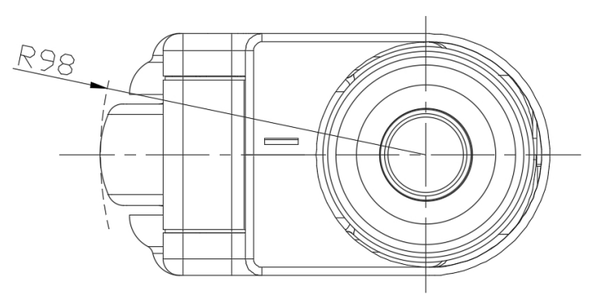

* For any deviation between metric and imperial spec, please refer to the metric spec.

© Copyright 2025 DershengInternational www.dersheng.com