Product Data Sheet

1139 Medium Duty General Purposes Caster Series

DERSHENG
Dersheng Casters Keep Rolling

Rubber Wheel Diameter × Wheel Width 75 x 30mm

EAN

YJ-11390300065043

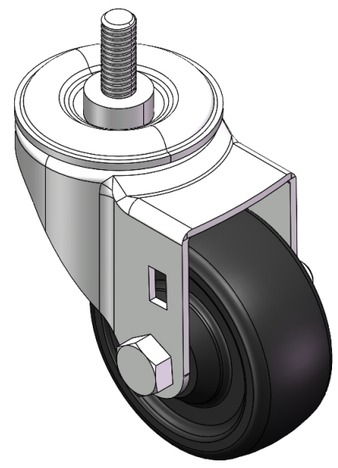

Picture may differ from original product

Swivel Caster, thread-Riveted Stamping Fork - 3/8"-16"
Zine-Plated, Mounting Type - Threaded Stem
Reinforced Polypropylene core, High-Quality Resilient Rubber Wheel Tread
Bearing - Plain Bearing

Wheel surface: high-quality elastic rubber
Wheel Center: Thermoplastic (PA6)

Drawings are for reference only and may differ from the product

Technical Data

◉ Imperial ○ Metric

Wheel Diameter	3 "
Wheel Width	1-3/16 "
Wheel Bearing	Wheel With Plain Bearing
Threaded Stem	3/8 " -16
Threaded Size	1 "
Offset	1-1/2 "
Swivel Interference	6 "
Overall Height	4-1/16 "
Swivel Radius	3 "
Hardness Of Tread	80±5° Shore A
Load Capacity (Dynamic)	154lbs
Load Capacity (Static)	231lbs
Temperature	-4°F to +248°F
Fork Type	Swivel Caster
Stainless	N/A
Electrical Conductivity	N/A
Anti-Static	N/A
Weight	1.3lbs
Standard	ISO22883

Advantages at a glance

Rolling Resistance	● ● ● ○ ○
Operating Noise	● ● ● ● ○
Floor Surface Preservation	● ● ● ● ○

Dimensions

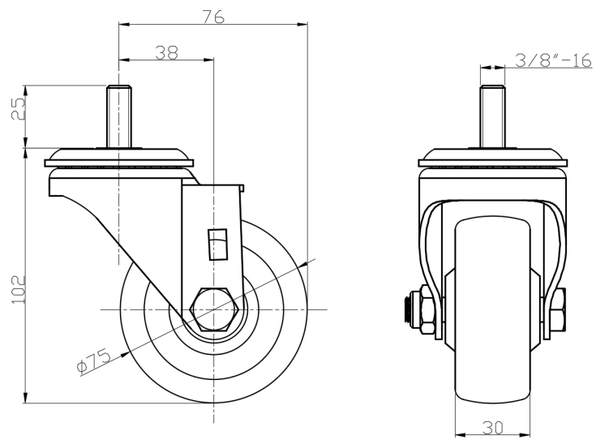

Mounting

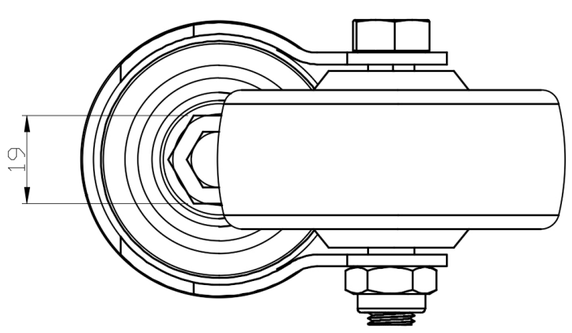

* For any deviation between metric and imperial spec, please refer to the metric spec.

© Copyright 2025 DershengInternational www.dersheng.com