Product Data Sheet

1139-1 Series — Medium Duty General Purposes Caster (American Style)

PPP (white) Wheel Diameter × Wheel Width 75.5 × 31.5 mm

EAN

YJ-11390300291033

Rigid Caster with Stamping Fabricated Caster Fork and 75 x 45 mm (3" x 1-3/4") Bolt Hole Spacing.
Zine-Plated, Mounting Type - Top Plate.
Polypropylene Wheel Center and Wheel Tread.
White. Bearings: Ball Bearings.

Tread:Polypropylene

Wheel Center:Polypropylene

Drawings are for reference only and may differ from the product

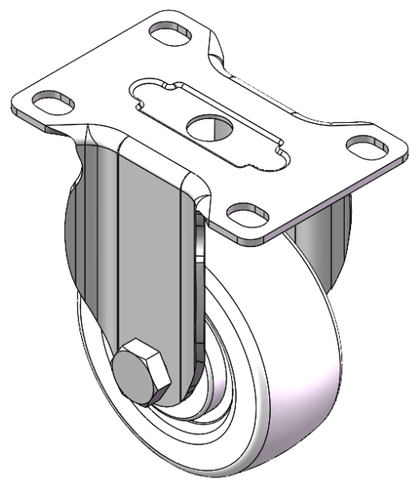

Picture may differ from original product

Technical Data

◉ Metric ○ Imperial

Wheel Diameter	75.5mm
Wheel Width	31.5mm
Wheel Bearing	Wheels With Ball Bearings
Plate Size	94 x 63mm
Bolt Hole Spacing	74 x 45mm
Plate Hole	12.3 x 9mm
Overall Height	106mm
Hardness Of Tread	65±5° Shore D
Load Capacity (Dynamic)	100kgs
Load Capacity (Static)	150kgs
Temperature	-10°C to +60°C
Fork Type	Rigid Caster
Stainless	N/A
Electrical Conductivity	N/A
Anti-Static	N/A
Weight	0.37kgs
Standard	ISO22883

Advantages at a glance

Rolling Resistance	● ● ● ● ●
Operating Noise	● ● ● ○ ○
Floor Surface Preservation	● ● ● ○ ○

Dimensions

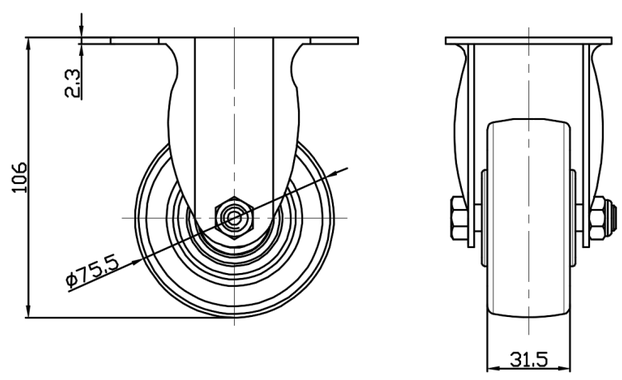

Mounting

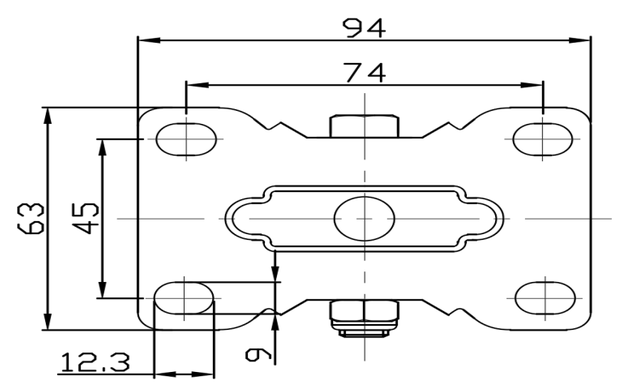

* For any deviation between metric and imperial spec, please refer to the metric spec.

© Copyright 2025 DershengInternational www.dersheng.com