Product Information Sheet

1139 Medium Duty General Purposes Caster Series

W Resolute (Pearlescent dark gray) Wheel Diameter × Wheel Width 75 x 31mm

EAN

YJ-11390300455026

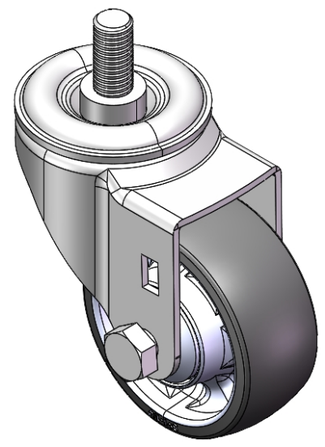

Picture may differ from original product

Portable Casters, Threaded Stem Stamping Fork—1/2"-13
Chrome-Plated finish, Mounting Type - Threaded Stem hardware
Reinforced impact-resistant polypropylene Wheel Center, High-Quality Reinforced Polypropylene Rubber (TPR) Wheel Tread
Pearlescent dark gray, Bearing—Ball Bearings.

Wheel tread: Thermoplastic rubber elastomer (TPR)

Wheel Center: Made of high-quality impact-resistant polypropylene

Drawings are for reference only and may differ from the product

Technical Data

◉ Metric ○ Imperial

Wheel Diameter	75mm
Wheel Width	31mm
Wheel Bearing	Wheels With Ball Bearings
Threaded Stem	1/2 " -13
Threaded Length	25mm
Offset	38mm
Swivel Interference	152mm
Overall Height	102mm
Swivel Radius	76mm
Hardness Of Tread	72±5° Shore A
Load Capacity (Dynamic)	110kgs
Load Capacity (Static)	165kgs
Temperature	-20°C to +60°C
Fork Type	Swivel Caster
Stainless	N/A
Electrical Conductivity	N/A
Anti-Static	N/A
Weight	0.52kgs
Standard	ISO22883

Advantages at a glance

Rolling Resistance	● ● ● ● ●
Operating Noise	● ● ● ● ●
Floor Surface Preservation	● ● ● ● ●

Dimensions

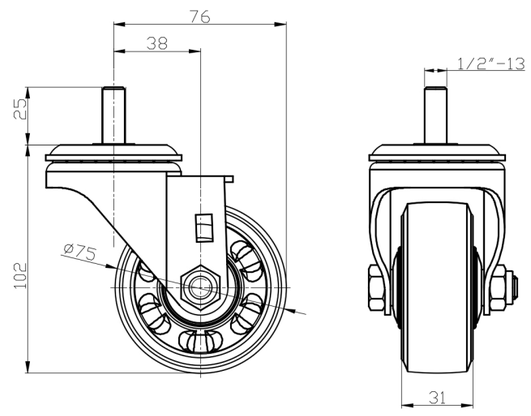

Mounting

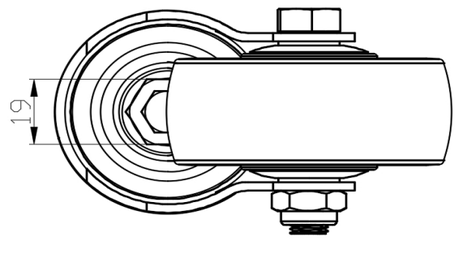

* For any deviation between metric and imperial spec, please refer to the metric spec.

© Copyright 2025 DershengInternational www.dersheng.com