Product Data Sheet

1139 Medium Duty General Purposes Caster Series

Rubber Wheel Diameter × Wheel Width 100 x 30.5mm

EAN

YJ-11390400065013

Swivel Caster, thread-Riveted Stamping Fork—3/8"-16 Extended control lever surface, Mounting Type - Threaded Stem device Reinforced Polypropylene, High-Quality Resilient Rubber Wheel Tread Wheel—Anti-thread wheel cover

Wheel Tread: high quality elastic rubber

Wheel Center: Thermoplastic (PA6)

Drawings are for reference only and may differ from the product

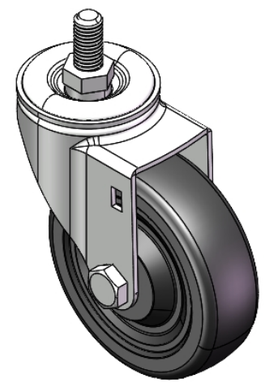

Picture may differ from original product

Technical Data

◉ Metric ○ Imperial

Wheel Diameter	100mm
Wheel Width	30.5mm
Wheel Bearing	Wheel With Plain Bearing
Threaded Stem	3/8 " -16
Threaded Size	32mm
Offset	38mm
Swivel Interference	176mm
Overall Height	130mm
Swivel Radius	88mm
Hardness Of Tread	80±5° Shore A
Load Capacity (Dynamic)	80kgs
Load Capacity (Static)	120kgs
Temperature	-20°C to +120°C
Fork Type	Swivel Caster
Stainless	N/A
Electrical Conductivity	N/A
Anti-Static	N/A
Weight	0.77kgs
Standard	ISO22883

Advantages at a glance

Rolling Resistance	● ● ● ○ ○
Operating Noise	● ● ● ● ○
Floor Surface Preservation	● ● ● ● ○

Dimensions

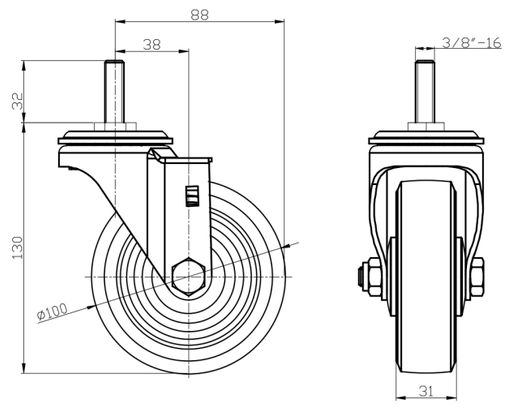

Mounting

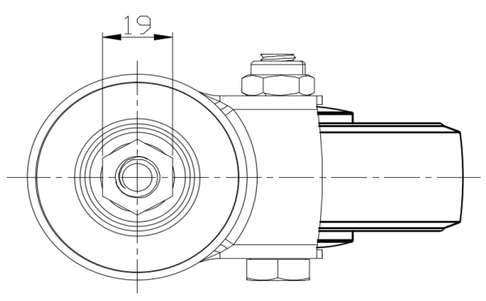

* For any deviation between metric and imperial spec, please refer to the metric spec.

© Copyright 2025 DershengInternational www.dersheng.com