Product Data Sheet

1139 Medium Duty General Purposes Caster Series

PP (grey) Wheel Diameter x Wheel Width 100 x 35mm

EAN

YJ-11390400294013

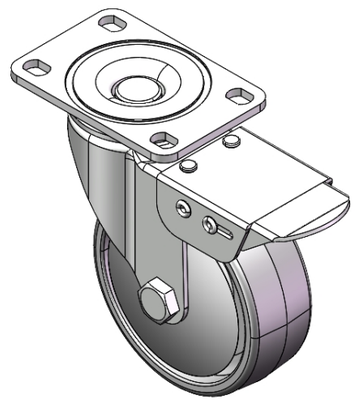

Picture may differ from original product

Castors with Total Brake Locking system. Top Plate Riveted Stamping Fork - 75 x 45 mm (3" x 1-3/4") Bolt Hole Spacing Surface Zine-Plated, Top Plate (4T) Mounting Type device Polypropylene Wheel Center, Wheel Tread Gray, wheel - Plain Bearing.

Wheel tread: PP polypropylene

Wheel Center: PP polypropylene

Drawings are for reference only and may differ from the product

Technical Data

◉ Metric ○ Imperial

Wheel Diameter	100mm
Wheel Width	35mm
Wheel Bearing	Wheel With Plain Bearing
Plate Size	95 x 65mm
Bolt Hole Spacing	75 x 45mm
Plate Hole	12 x 9mm
Offset	38mm
Swivel Interference	230mm
Overall Height	130mm
Swivel Radius	115mm
Hardness Of Tread	65±5° Shore D
Load Capacity (Dynamic)	140kgs
Load Capacity (Static)	210kgs
Temperature	-10°C to +60°C
Fork Type	Swivel Caster With Total Brake
Stainless	N/A
Electrical Conductivity	N/A
Anti-Static	N/A
Weight	0.84kgs
Standard	ISO22883

Advantages at a glance

Rolling Resistance	● ● ● ● ●
Operating Noise	● ● ● ○ ○
Floor Surface Preservation	● ● ● ○ ○

Dimensions

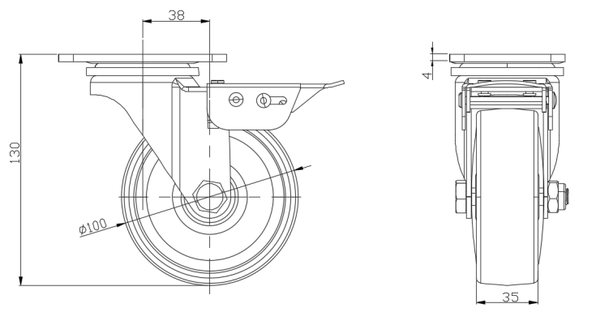

Mounting

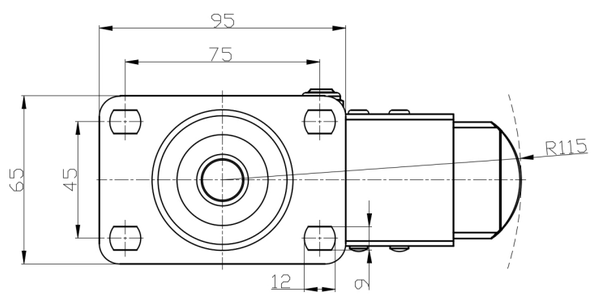

* For any deviation between metric and imperial spec, please refer to the metric spec.

© Copyright 2025 DershengInternational www.dersheng.com