Product Data Sheet

1139 Medium Duty General Purposes Caster Series

DERSHENG
Dersheng Casters Keep Rolling

WPP (Black) Wheel Diameter × Wheel Width 100 x 31mm

EAN

YJ-11390400298913

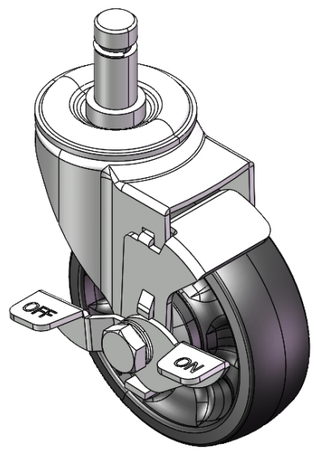

Picture may differ from original product

Castors with Side Brakes and Locking system. Riveted Fork with plug-in rods —∅15.7 Surface Zine-Plated, plug-in rod Mounting Type device Polypropylene Wheel Center and Wheel Tread Black, Bearing — Ball Bearings.

Wheel Tread: PP polypropylene
Wheel surface: PP polypropylene

Drawings are for reference only and may differ from the product

Technical Data

◉ Imperial ○ Metric

Wheel Diameter	4 "
Wheel Width	1-1/4 "
Wheel Bearing	Wheels With Ball Bearings
Diameter	5/8 "
Stem Hole Spec	1-3/8 "
Offset	1-1/2 "
Swivel Interference	7 "
Overall Height	5 "
Swivel Radius	3-1/2 "
Hardness Of Tread	65±5° Shore D
Load Capacity (Dynamic)	287lbs
Load Capacity (Static)	430lbs
Temperature	14°F to +140°F
Fork Type	Swivel Caster With Side Brake
Stainless	N/A
Electrical Conductivity	N/A
Anti-Static	N/A
Weight	1.6lbs
Standard	ISO22883

Advantages at a glance

Rolling Resistance	● ● ● ● ●
Operating Noise	● ● ● ○ ○
Floor Surface Preservation	● ● ● ○ ○

Dimensions

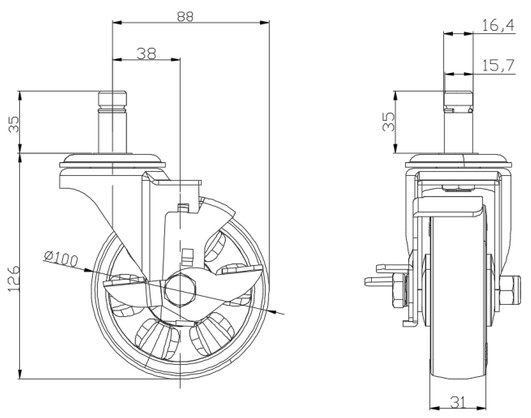

Mounting

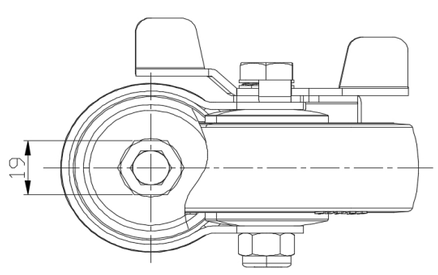

* For any deviation between metric and imperial spec, please refer to the metric spec.

© Copyright 2025 DershengInternational www.dersheng.com