Product Data Sheet

# 1139 Medium Duty General Purposes Caster Series

AQPU (blue round) Wheel Diameter × Wheel Width 100 x 36mm

EAN

YJ-11390400601053

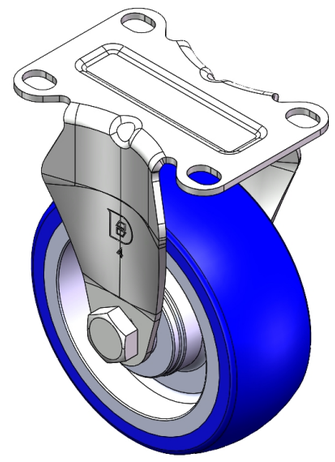

Picture may differ from original product

Rigid Caster with Stamping Fabricated Caster Fork and 75 x 45 mm (3" x 1-3/4") Bolt Hole Spacing.
Zine-Plated, Mounting Type - Top Plate.
Aluminum core, High Quality Polyurethane Wheel Tread.
Blue color, Bearing—Ball Bearings.

Wheel tread: Made of high-quality polyurethane
Wheel Center: aluminum core

Drawings are for reference only and may differ from the product

## Technical Data

◉ Imperial ○ Metric

| | |
|---|---|
| Wheel Diameter | 4 " |
| Wheel Width | 1-7/16 " |
| Wheel Bearing | Wheels With Ball Bearings |
| Plate Size | 3-11/16 " x 2-1/2 " |
| Bolt Hole Spacing | 3 " x 1-13/16 " |
| Plate Hole | 1/2 " x 23/64 " |
| Overall Height | 5-3/16 " |
| Hardness Of Tread | 87±5° Shore A |
| Load Capacity (Dynamic) | 441lbs |
| Load Capacity (Static) | 661lbs |
| Temperature | -4°F to +158°F |
| Fork Type | Rigid Caster |
| Stainless | N/A |
| Electrical Conductivity | N/A |
| Anti-Static | N/A |
| Weight | 1.5lbs |
| Standard | ISO22883 |

## Advantages at a glance

| | |
|---|---|
| Rolling Resistance | ● ● ● ● ● |
| Operating Noise | ● ● ● ● ● |
| Floor Surface Preservation | ● ● ● ● ● |

## Dimensions

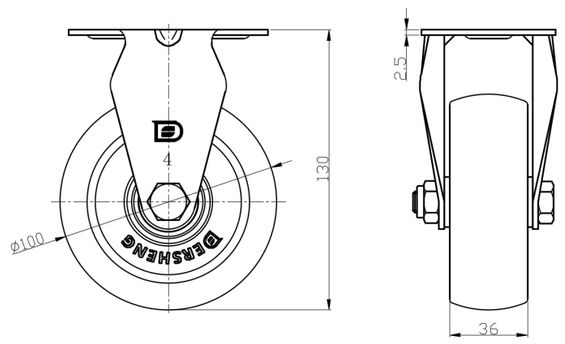


## Mounting

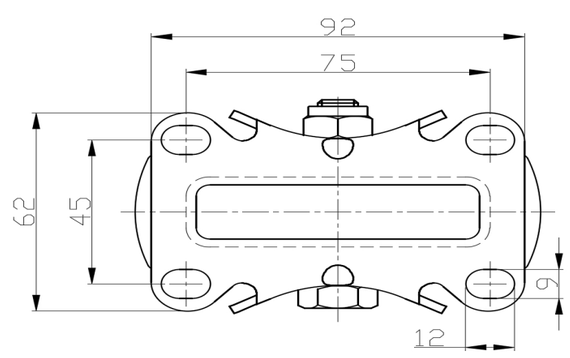


* For any deviation between metric and imperial spec, please refer to the metric spec.

© Copyright 2025 DershengInternational www.dersheng.com