Product Data Sheet

1139 Medium Duty General Purposes Caster Series

PPR (Pearlescent dark gray) Wheel Diameter × Wheel Width 125 x 31mm

EAN

YJ-11390500264053

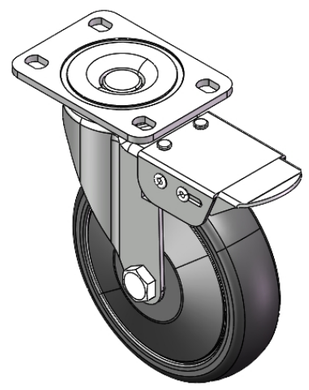

Picture may differ from original product

Casters with a Total Brake and With locking system. Top Plate Riveted and Stamping with 75 x 45 mm (3" x 1-3/4") Bolt Hole Spacing.
Zine-Plated, Top Plate (4T) Mounting Type system.
High-Quality Impact-Resistant Polypropylene Wheel Center with High-Quality Reinforced Polypropylene Rubber (TPR) Wheel Tread.
Pearl-finish dark gray. Bearings: Ball Bearings.

Wheel tread: Thermoplastic rubber elastomer (TPR)

Wheel Center: Made of high-quality impact-resistant polypropylene

Drawings are for reference only and may differ from the product

Technical Data

◉ Metric ○ Imperial

Wheel Diameter	125mm
Wheel Width	31mm
Wheel Bearing	Wheels With Ball Bearings
Plate Size	95 x 65mm
Bolt Hole Spacing	75 x 45mm
Plate Hole	12 x 9mm
Offset	38mm
Swivel Interference	230mm
Overall Height	158mm
Swivel Radius	115mm
Hardness Of Tread	82±5° Shore A
Load Capacity (Dynamic)	110kgs
Load Capacity (Static)	165kgs
Temperature	-20°C to +60°C
Fork Type	Swivel Caster With Total Brake
Stainless	N/A
Electrical Conductivity	N/A
Anti-Static	N/A
Weight	0.97kgs
Standard	ISO22883

Advantages at a glance

Rolling Resistance	● ● ● ● ○
Operating Noise	● ● ● ● ○
Floor Surface Preservation	● ● ● ● ●

Dimensions

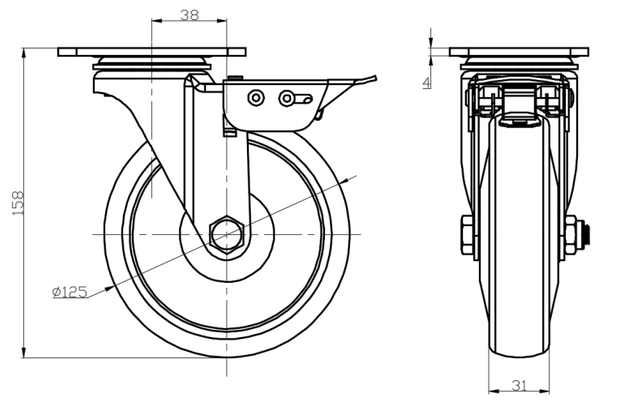

Mounting

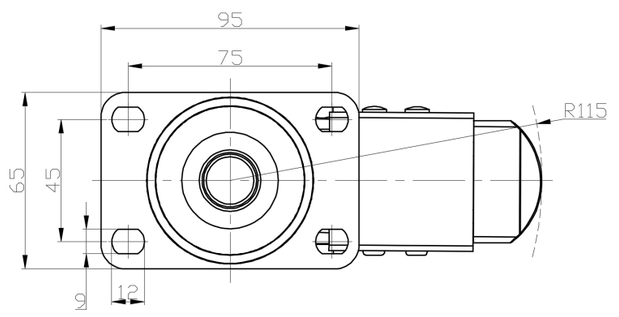

* For any deviation between metric and imperial spec, please refer to the metric spec.

© Copyright 2025 DershengInternational www.dersheng.com