Product Data Sheet

1139 Medium Duty General Purposes Caster Series

W Resolute (Pearlescent dark gray) Wheel Diameter × Wheel Width 125 x 31mm

EAN

YJ-11390500452033

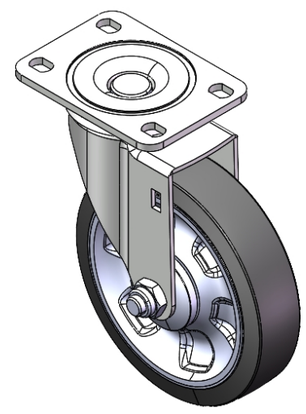

Picture may differ from original product

Swivel castor, Top Plate Riveted Stamping Fork - premium hole Surface Zine-Plated, Top Plate (4T) Mounting Type device Reinforced impact resistant High-quality Impact Resistance Polypropylene Wheel Center,High-Quality Thermoplastic Rubber (TPR) Wheel Tread Pearl dark gray, Bearing - Ball Bearing.

Wheel tread: Thermoplastic rubber elastomer (TPR)

Wheel Center: Made of high-quality impact-resistant polypropylene

Drawings are for reference only and may differ from the product

Technical Data

◉ Imperial ○ Metric

Wheel Diameter	5 "
Wheel Width	1-1/4 "
Wheel Bearing	Wheels With Ball Bearings
Plate Size	3-13/16 " x 2-9/16 "
Bolt Hole Spacing	3 " x 1-13/16 "
Plate Hole	1/2 " x 23/64 "
Offset	1-1/2 "
Swivel Interference	8 "
Overall Height	6-5/16 "
Swivel Radius	4 "
Hardness Of Tread	72±5° Shore A
Load Capacity (Dynamic)	324lbs
Load Capacity (Static)	485lbs
Temperature	-4°F to +140°F
Fork Type	Swivel Caster
Stainless	N/A
Electrical Conductivity	N/A
Anti-Static	N/A
Weight	1.9lbs
Standard	ISO22883

Advantages at a glance

Rolling Resistance	● ● ● ● ●
Operating Noise	● ● ● ● ●
Floor Surface Preservation	● ● ● ● ●

Dimensions

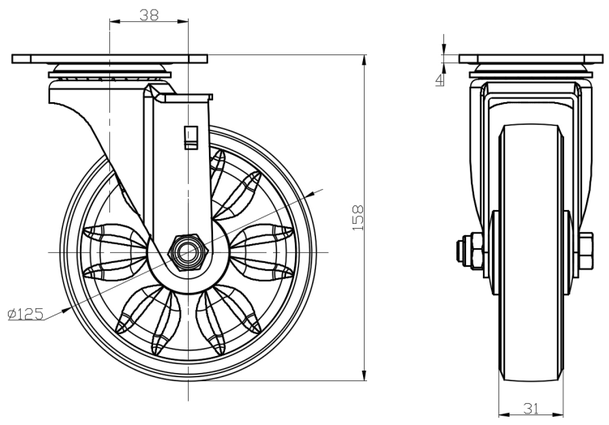

Mounting

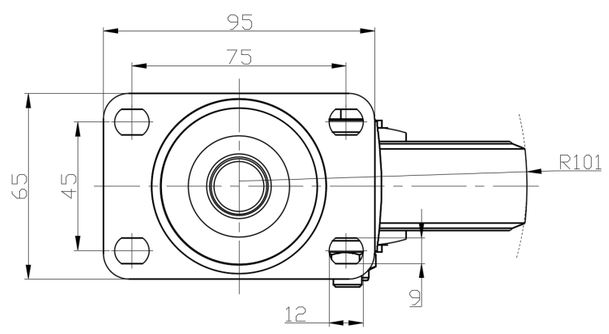

* For any deviation between metric and imperial spec, please refer to the metric spec.

© Copyright 2025 DershengInternational www.dersheng.com