1148 48 48 Series Central Locking Caster Series (All Plastic)

Resolute Rubber wheel (White dark gray) Wheel Diameter x Wheel Width 125 x 15mm

EAN

YJ-11480500458010

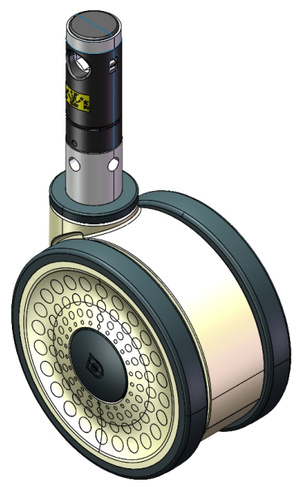

Drawings are for reference only and may differ from the product

Picture may differ from original product

Technical Data

◉ Metric ○ Imperial

Wheel Diameter	125mm
Wheel Width	73mm
Wheel Bearing	Wheels With Ball Bearings
Stem Diameter	28mm
Stem Length	96mm
Offset	40mm
Swivel Interference	216mm
Overall Height	130mm
Swivel Radius	108mm
Hardness Of Tread	72±5° Shore A
Load Capacity (Dynamic)	150kgs
Load Capacity (Static)	225kgs
Temperature	-20°C to +60°C
Fork Type	Swivel Caster With Total Brake
Stainless	N/A
Electrical Conductivity	N/A
Anti-Static	N/A
Weight	1.15kgs
Standard	ISO22881

Advantages at a glance

Rolling Resistance	● ● ● ● ●
Operating Noise	● ● ● ● ●
Floor Surface Preservation	● ● ● ● ●

Dimensions

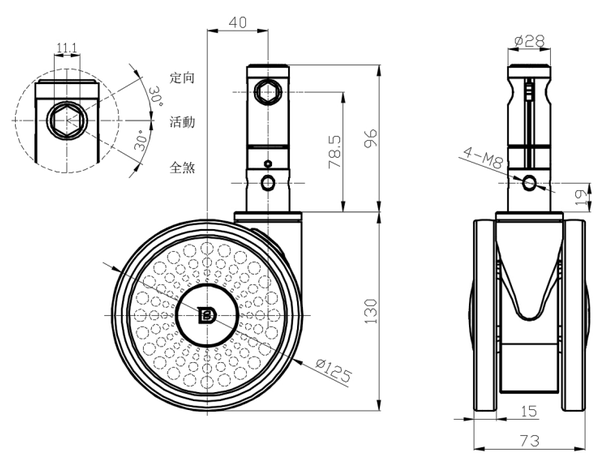

Mounting

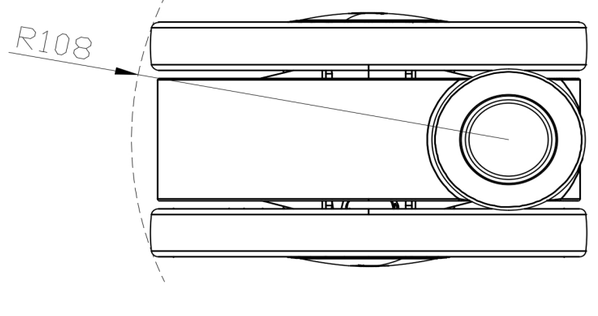

* For any deviation between metric and imperial spec, please refer to the metric spec.

© Copyright 2026 DershengInternational www.dersheng.com