# 1148 48 48 Series Central Locking Caster Series (All Plastic)

Resolute Rubber wheel (White dark gray) Wheel Diameter x Wheel Width 125 x 15mm

EAN

YJ-11480500458020

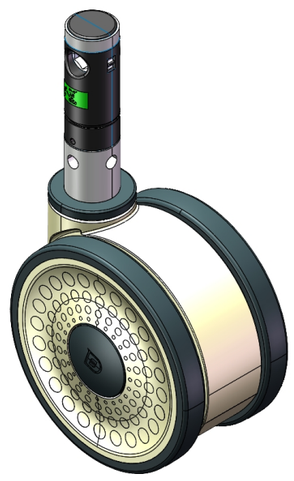

Drawings are for reference only and may differ from the product

Picture may differ from original product

## Technical Data

◉ Metric ○ Imperial

| | |
|---|---|
| Wheel Diameter | 125mm |
| Wheel Width | 73mm |
| Wheel Bearing | Wheels With Ball Bearings |
| Stem Diameter | 28mm |
| Stem Length | 96mm |
| Offset | 40mm |
| Swivel Interference | 216mm |
| Overall Height | 130mm |
| Swivel Radius | 108mm |
| Hardness Of Tread | 72±5° Shore A |
| Load Capacity (Dynamic) | 150kgs |
| Load Capacity (Static) | 225kgs |
| Temperature | -20°C to +60°C |
| Fork Type | Swivel Caster With Total Brake |
| Stainless | N/A |
| Electrical Conductivity | N/A |
| Anti-Static | N/A |
| Weight | 1.06kgs |
| Standard | ISO22881 |

## Advantages at a glance

| | |
|---|---|
| Rolling Resistance | ● ● ● ● ● |
| Operating Noise | ● ● ● ● ● |
| Floor Surface Preservation | ● ● ● ● ● |

## Dimensions

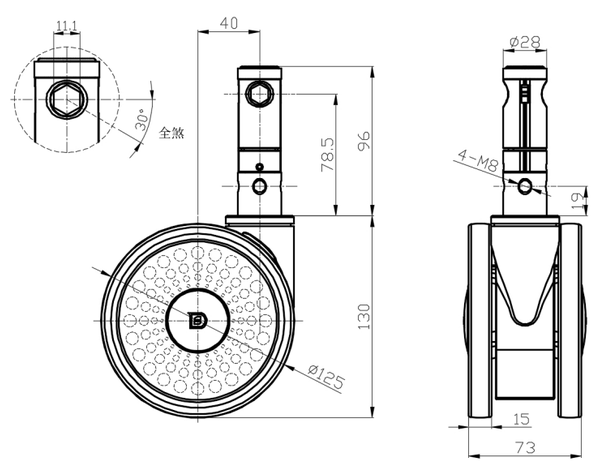


## Mounting

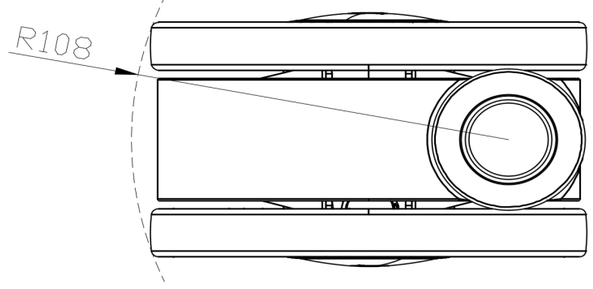


* For any deviation between metric and imperial spec, please refer to the metric spec.

© Copyright 2026 DershengInternational www.dersheng.com