Product Information Sheet

1148 48 48 Series Central Locking Caster Series (All Plastic)

Central Control Double-Ball Full-Effect Wheel (White-Dark Gray) Wheel Diameter × Wheel Width 150 × 1

EAN

YJ-11480600458040

Central locking controlled by a short lever and Hexagonal hole cam, Total Brake Caster.
Single Bolthole Riveted Stamping Fork.
Polyamide wheel Fork—white, hollow Mounting Type device
High-Quality Impact-Resistant Polypropylene Wheel Center, High-Quality Reinforced Polypropylene Rubber (TPR) Wheel Tread
White/dark gray, Bearing—Ball Bearings.

Wheel tread: Thermoplastic rubber elastomer (TPR)

Wheel Center: Made of high-quality impact-resistant polypropylene

Drawings are for reference only and may differ from the product

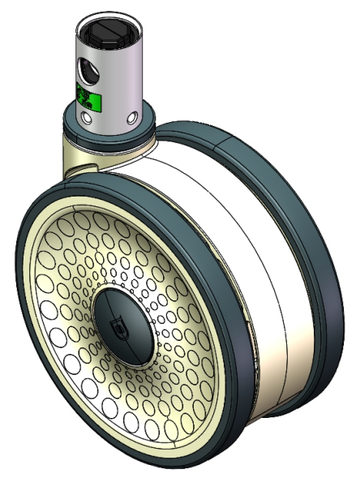

Picture may differ from original product

Technical Data

◉ Metric ○ Imperial

Wheel Diameter	150mm
Wheel Width	75mm
Wheel Bearing	Wheels With Ball Bearings
Stem Diameter	32mm
Stem Length	50mm
Offset	47.5mm
Swivel Interference	254mm
Overall Height	155mm
Swivel Radius	127mm
Hardness Of Tread	72±5° Shore A
Load Capacity (Dynamic)	150kgs
Load Capacity (Static)	225kgs
Temperature	-20°C to +60°C
Fork Type	Swivel Caster With Total Brake
Stainless	N/A
Electrical Conductivity	N/A
Anti-Static	N/A
Weight	1.23kgs
Standard	ISO22881

Advantages at a glance

Rolling Resistance	● ● ● ● ●
Operating Noise	● ● ● ● ●
Floor Surface Preservation	● ● ● ● ●

Dimensions

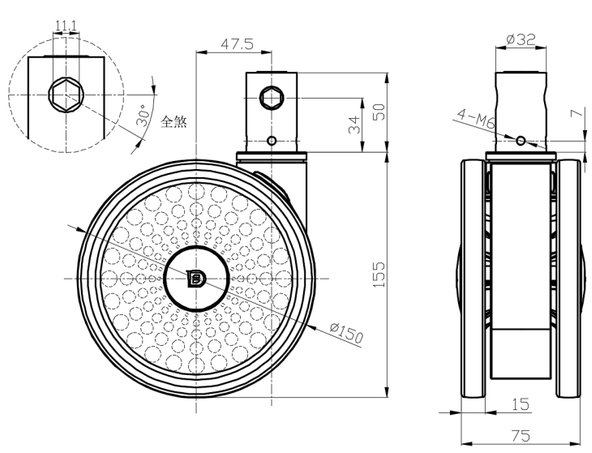

Mounting

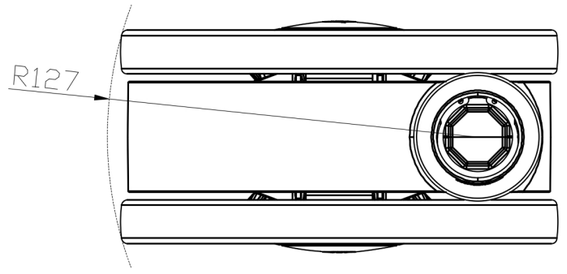

* For any deviation between metric and imperial spec, please refer to the metric spec.

© Copyright 2025 DershengInternational www.dersheng.com