1148 48 48 Series Central Locking Caster Series (All Plastic)

Central Control Double-Ball Full-Effect Wheel (White-Dark Gray) Wheel Diameter × Wheel Width 150 × 1

EAN

YJ-11480600458090

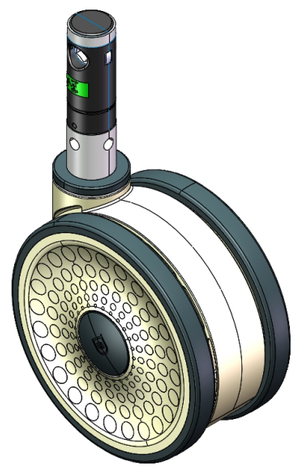

Drawings are for reference only and may differ from the product

Picture may differ from original product

Technical Data

◉ Metric ○ Imperial

Wheel Diameter	150mm
Wheel Width	75mm
Wheel Bearing	Wheels With Ball Bearings
Stem Diameter	28mm
Stem Length	96mm
Offset	47.5mm
Swivel Interference	254mm
Overall Height	155mm
Swivel Radius	127mm
Hardness Of Tread	72±5° Shore A
Load Capacity (Dynamic)	150kgs
Load Capacity (Static)	225kgs
Temperature	-20°C to +60°C
Fork Type	Swivel Caster With Total Brake
Stainless	N/A
Electrical Conductivity	N/A
Anti-Static	N/A
Weight	1.24kgs
Standard	ISO22881

Advantages at a glance

Rolling Resistance	● ● ● ● ●
Operating Noise	● ● ● ● ●
Floor Surface Preservation	● ● ● ● ●

Dimensions

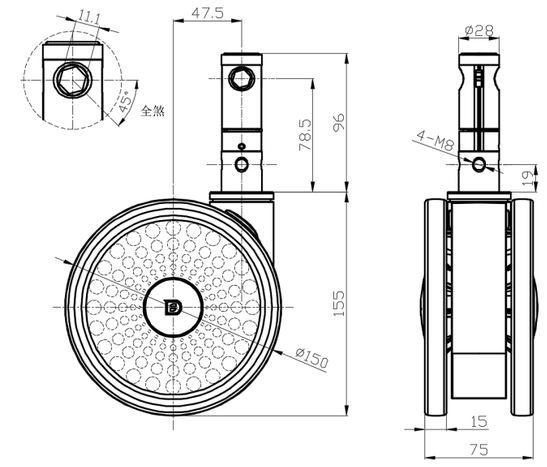

Mounting

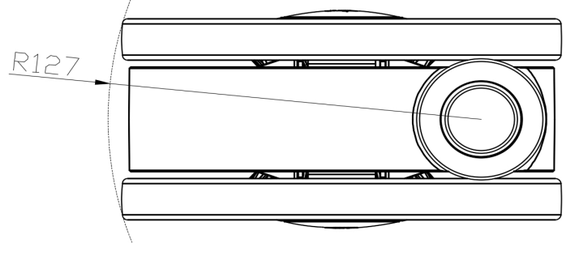

* For any deviation between metric and imperial spec, please refer to the metric spec.

© Copyright 2026 DershengInternational www.dersheng.com