1148 48 48 Series Central Locking Caster Series (All Plastic)

Central Control Double-Ball Full-Effect Wheel (White-Dark Gray) Wheel Diameter × Wheel Width 150 × 1

EAN

YJ-11480600458090

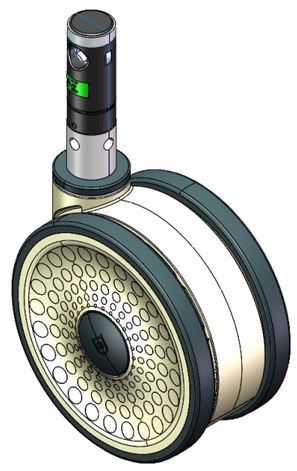

Drawings are for reference only and may differ from the product

Picture may differ from original product

Technical Data

◉ Imperial ○ Metric

Wheel Diameter	6 "
Wheel Width	3 "
Wheel Bearing	Wheels With Ball Bearings
Stem Diameter	1-1/8 "
Stem Length	3-7/8 "
Offset	1-15/16 "
Swivel Interference	10 "
Overall Height	7-1/2 "
Swivel Radius	5 "
Hardness Of Tread	72±5° Shore A
Load Capacity (Dynamic)	331lbs
Load Capacity (Static)	496lbs
Temperature	-4°F to +140°F
Fork Type	Swivel Caster With Total Brake
Stainless	N/A
Electrical Conductivity	N/A
Anti-Static	N/A
Weight	2.7lbs
Standard	ISO22881

Advantages at a glance

Rolling Resistance	● ● ● ● ●
Operating Noise	● ● ● ● ●
Floor Surface Preservation	● ● ● ● ●

Dimensions

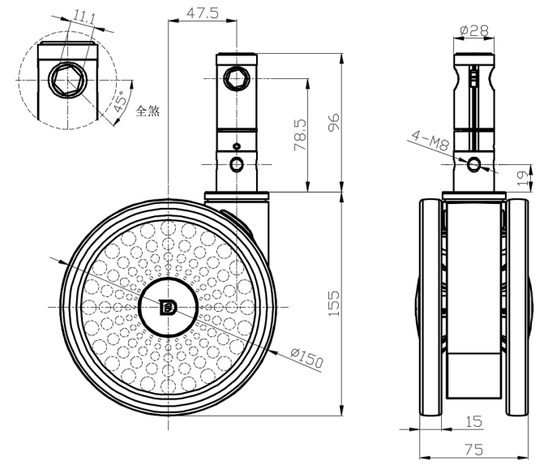

Mounting

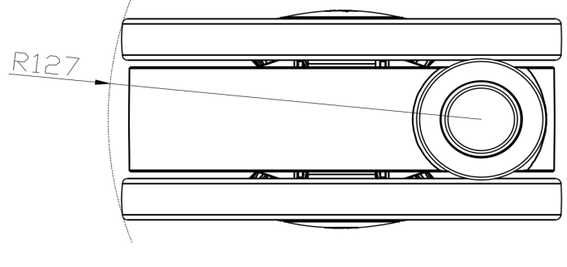

* For any deviation between metric and imperial spec, please refer to the metric spec.

© Copyright 2026 DershengInternational www.dersheng.com