Product Data Sheet

# 1151D Heavy Duty 1.5" Wide General Purposes Caster Series

PU (red flat wheel) Wheel Diameter × Wheel Width 100 × 34 mm

A

YJ-11510400331013

Rigid Caster with integral Stamping Fork and 85 x 70mm (3-3/8" x 2-3/4") Bolt Hole Spacing. Zine-Plated, Mounting Type - Top Plate. Cast Iron Wheel Center with High Quality Polyurethane tread. Red Cast Iron finish, Bearing with Ball Bearing.

Wheel tread: Made of high-quality polyurethane

Wheel Center: iron core/cast iron core

Drawings are for reference only and may differ from the product

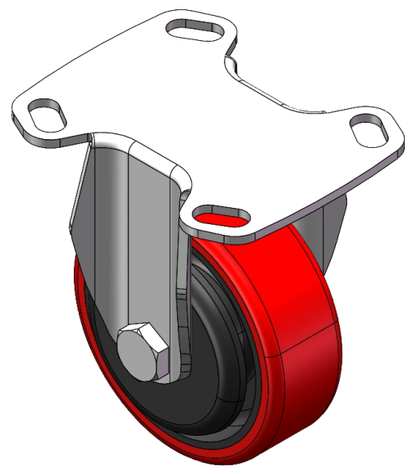

Picture may differ from original product

## Technical Data

◉ Imperial ○ Metric

| | |
|---|---|
| Wheel Diameter | 4 " |
| Wheel Width | 1-3/8 " |
| Wheel Bearing | Wheels With Ball Bearings |
| Plate Size | 4-11/16 " x 3-13/16 " |
| Bolt Hole Spacing | 3-7/16 " x 2-13/16 " |
| Plate Hole | 13/16 " x 3/8 " |
| Overall Height | 5-3/16 " |
| Hardness Of Tread | 92±5° Shore A |
| Load Capacity (Dynamic) | 441lbs |
| Load Capacity (Static) | 661lbs |
| Temperature | -4°F to +158°F |
| Fork Type | Rigid Caster |
| Stainless | N/A |
| Electrical Conductivity | N/A |
| Anti-Static | N/A |
| Weight | 2.9lbs |
| Standard | ISO22883 |

## Advantages at a glance

| | |
|---|---|
| Rolling Resistance | ● ● ● ○ ○ |
| Operating Noise | ● ● ● ● ○ |
| Floor Surface Preservation | ● ● ● ● ○ |

## Dimensions

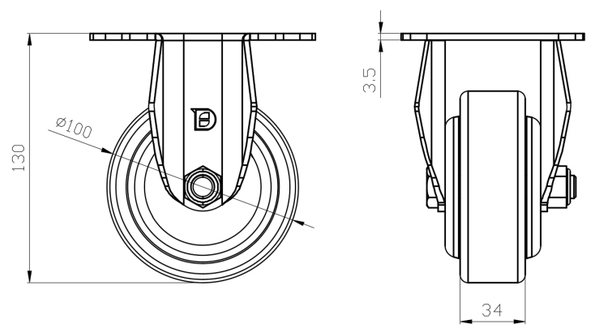


## Mounting

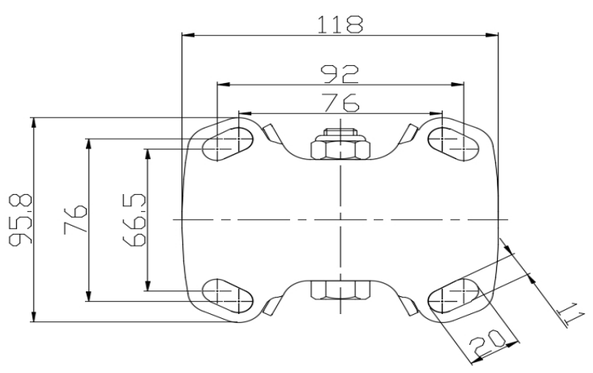


* For any deviation between metric and imperial spec, please refer to the metric spec.

© Copyright 2025 DershengInternational www.dersheng.com