Product Data Sheet

1151D Heavy Duty 1.5" Wide General Purposes Caster Series

PU (red flat) Wheel Diameter × Wheel Width 125 × 40 mm

EAN

YJ-11510500332013

Swivel Caster with Riveted Fork and Stamping Fork with D-shaped hole. Zine-Plated, Fork-mounted Mounting Type. Cast Iron Wheel Center with High Quality Polyurethane tread. Red Cast Iron finish, Bearing with Ball Bearing.

Wheel tread: Made of high-quality polyurethane

Wheel Center: cast iron core

Drawings are for reference only and may differ from the product

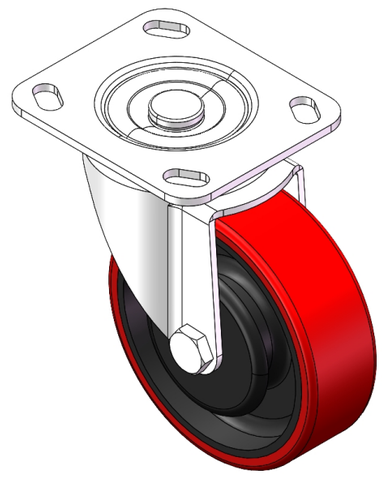

Picture may differ from original product

Technical Data

◉ Imperial ○ Metric

Wheel Diameter	5 "
Wheel Width	1-5/8 "
Wheel Bearing	Wheels With Ball Bearings
Plate Size	4-9/16 " x 4 "
Bolt Hole Spacing	3-3/8 " x 2-3/4 "
Plate Hole	13/16 " x 3/8 "
Offset	1-5/8 "
Swivel Interference	8-1/4 "
Overall Height	6-1/8 "
Swivel Radius	4-1/8 "
Hardness Of Tread	93±5° Shore A
Load Capacity (Dynamic)	551lbs
Load Capacity (Static)	827lbs
Temperature	-4°F to +158°F
Fork Type	Swivel Caster
Stainless	N/A
Electrical Conductivity	N/A
Anti-Static	N/A
Weight	4.7lbs
Standard	ISO22883

Advantages at a glance

Rolling Resistance	● ● ● ○ ○
Operating Noise	● ● ● ● ○
Floor Surface Preservation	● ● ● ● ○

Dimensions

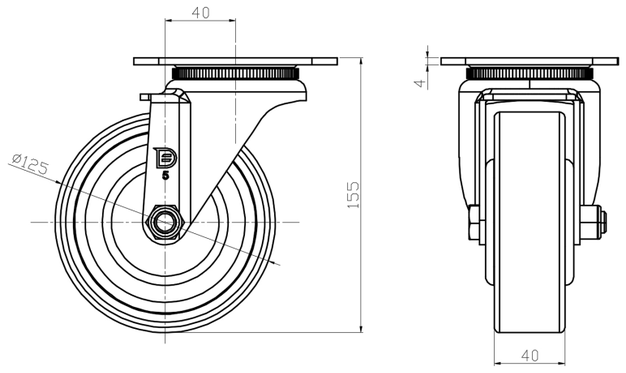

Mounting

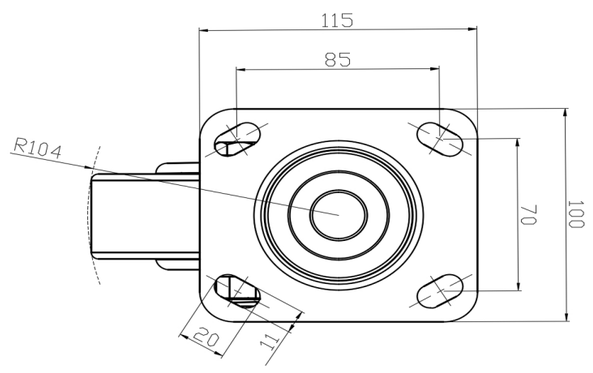

* For any deviation between metric and imperial spec, please refer to the metric spec.

© Copyright 2025 DershengInternational www.dersheng.com