Product Data Sheet

1151D Heavy Duty 1.5" Wide General Purposes Caster Series

PU (red round) Wheel Diameter × Wheel Width 150 x 42mm

EAN

YJ-11510600332043

Swivel Caster with Riveted Fork and Stamping Fork with D-shaped hole. Zine-Plated, Fork-mounted (4T) Mounting Type system. Cast Iron Wheel Center with High Quality Polyurethane tread. Red Cast Iron finish, Bearing with Ball Bearing.

Wheel tread: Made of high-quality polyurethane

Wheel Center: cast iron core

Drawings are for reference only and may differ from the product

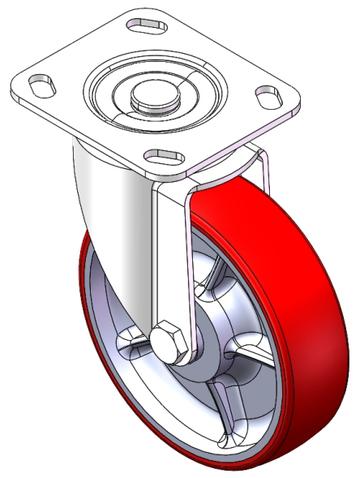

Picture may differ from original product

Technical Data

◉ Imperial ○ Metric

Wheel Diameter	6 "
Wheel Width	1-11/16 "
Wheel Bearing	Wheels With Ball Bearings
Plate Size	4-9/16 " x 4 "
Bolt Hole Spacing	3-3/8 " x 2-3/4 "
Plate Hole	13/16 " x 3/8 "
Offset	1-5/8 "
Swivel Interference	9-1/8 "
Overall Height	7-1/2 "
Swivel Radius	4-9/16 "
Hardness Of Tread	93±5° Shore A
Load Capacity (Dynamic)	772lbs
Load Capacity (Static)	1157lbs
Temperature	-4°F to +158°F
Fork Type	Swivel Caster
Stainless	N/A
Electrical Conductivity	N/A
Anti-Static	N/A
Weight	5.6lbs
Standard	ISO22883

Advantages at a glance

Rolling Resistance	● ● ● ○ ○
Operating Noise	● ● ● ● ○
Floor Surface Preservation	● ● ● ● ○

Dimensions

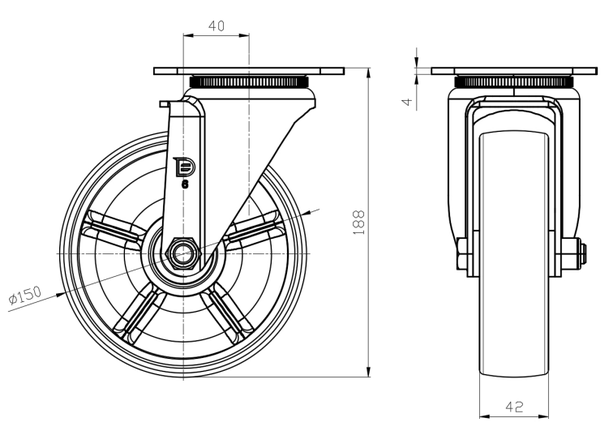

Mounting

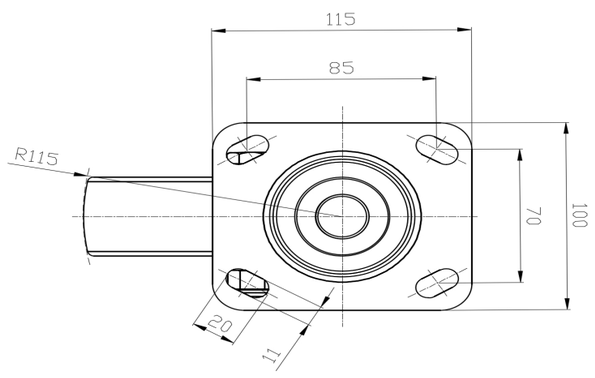

* For any deviation between metric and imperial spec, please refer to the metric spec.

© Copyright 2025 DershengInternational www.dersheng.com