PU Series

Wheel Diameter × Wheel Width 80 x 60mm

EAN

YJ-12033303236101

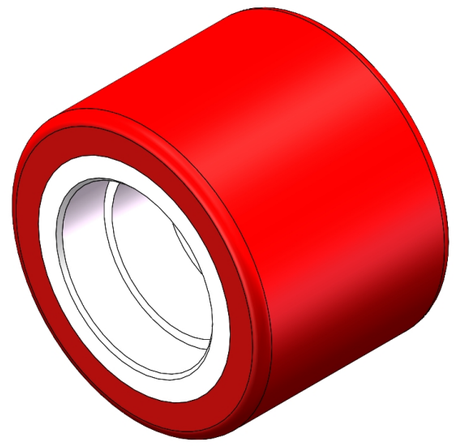

Picture may differ from original product

It offers excellent Floor Surface Preservation and wear resistance, and operates with low noise.
It possesses excellent Hydrolysis Resistance.
Suitable for tropical regions and humid working environments.
PU Red

Wheel Center: cast iron core

Wheel Tread: High-quality polyurethane

Bearings: —

Drawings are for reference only and may differ from the product

Technical Data

◉ Metric ○ Imperial

Wheel Diameter(D)	80mm
Wheel Width(T2)	60mm
Wheel Bearing	Without Bearing
Axle Bore(d)	—
Axle Bore(S)	47mm
Bearing Bore Depth(t)	14mm
Hub Lenth(T1)	—mm
Hardness Of Tread	92±5° Shore A
Load Capacity (Dynamic)	500kgs
Load Capacity (Static)	750kgs
Temperature	-20°C to +70°C
Electrical Conductivity	N/A
Anti-Static	N/A
Weight	0.74kgs
Standard	ISO22883

Advantages at a glance

Rolling Resistance	● ● ● ○ ○
Operating Noise	● ● ● ● ○
Floor Surface Preservation	● ● ● ● ○

2D Dimensional Drawing of Single Wheel

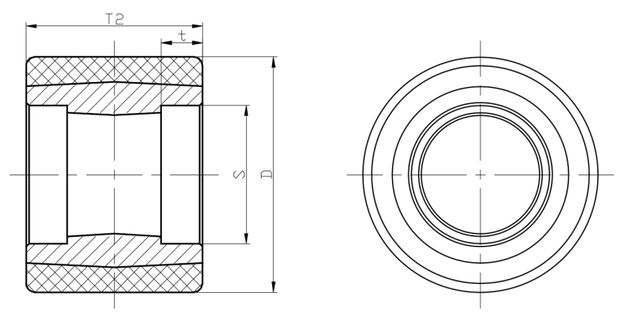

* For any deviation between metric and imperial spec, please refer to the metric spec.

© Copyright 2026 DershengInternational www.dersheng.com