# PU Series

wheel diameter × wheel width 70 x 70mm

EAN

YJ-12033303286500

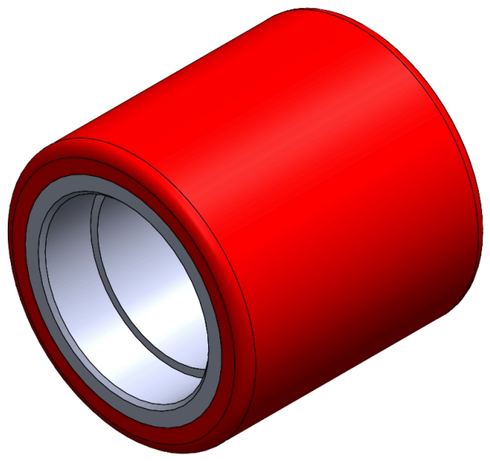

Picture may differ from original product

Drawings are for reference only and may differ from the product

## Technical Data

◉ Imperial ○ Metric

| | |
|---|---|
| Wheel Diameter(D) | 2-13/16 |
| Wheel Width(T2) | 2-13/16 " |
| Wheel Bearing | Without Bearing |
| Axle Bore(d) | — |
| Axle Bore(S) | 1-7/8 " |
| Bearing Bore Depth(t) | 9/16 " |
| Hub Lenth(T1) | — |
| Hardness Of Tread | 92±5° Shore A |
| Load Capacity (Dynamic) | 1102lbs |
| Load Capacity (Static) | 1543lbs |
| Temperature | -4°F to +158°F |
| Electrical Conductivity | N/A |
| Anti-Static | N/A |
| Weight | 1.2lbs |
| Standard | ISO22883 |

## Advantages at a glance

| | |
|---|---|
| Rolling Resistance | ●●●○○ |
| Operating Noise | ●●●●○ |
| Floor Surface Preservation | ●●●●○ |

## 2D Dimensional Drawing of Single Wheel

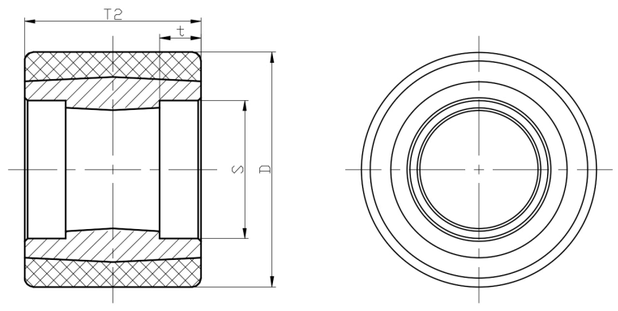




* For any deviation between metric and imperial spec, please refer to the metric spec.

© Copyright 2026 DershengInternational www.dersheng.com