PU Series

Wheel Diameter × Wheel Width 100 x 34mm

EAN

YJ-12033304136801



Picture may differ from original product

It offers excellent Floor Surface Preservation and wear resistance, and operates with low noise.
It possesses excellent Hydrolysis Resistance.
Suitable for tropical regions and humid working environments.
PU Black

Wheel Center: cast iron core
Wheel Tread: High-quality polyurethane
Bearings: —

Drawings are for reference only and may differ from the product

Technical Data

◉ Imperial ○ Metric

Wheel Diameter(D)	4 "
Wheel Width(T2)	1-3/8 "
Wheel Bearing	Without Bearing
Axle Bore(d)	—
Axle Bore(S)	1-3/8 "
Bearing Bore Depth(t)	3/8 "
Hub Lenth(T1)	1-3/8 "
Hardness Of Tread	92±5° Shore A
Load Capacity (Dynamic)	705lbs
Load Capacity (Static)	1058lbs
Temperature	-4°F to +158°F
Electrical Conductivity	N/A
Anti-Static	N/A
Weight	1.4lbs
Standard	ISO22883

Advantages at a glance

Rolling Resistance	● ● ● ○ ○
Operating Noise	● ● ● ● ○
Floor Surface Preservation	● ● ● ● ○

2D Dimensional Drawing of Single Wheel

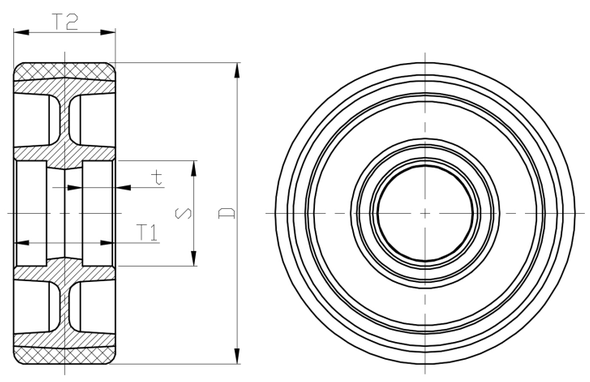

* For any deviation between metric and imperial spec, please refer to the metric spec.

© Copyright 2026 DershengInternational www.dersheng.com