QPU Series

Wheel Diameter × Wheel Width 75 x 45mm

EAN

YJ-12035303186201

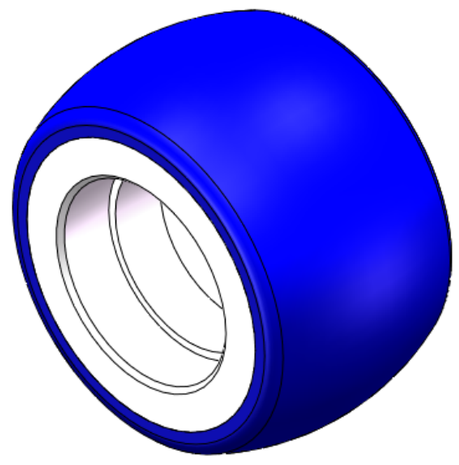

Picture may differ from original product

Drawings are for reference only and may differ from the product

Technical Data

◉ Imperial ○ Metric

Wheel Diameter(D)	3 "
Wheel Width(T2)	1-13/16 "
Wheel Bearing	Without Bearing
Axle Bore(d)	—
Axle Bore(S)	3/8 "
Bearing Bore Depth(t)	1/2 "
Hub Lenth(T1)	1-13/16 "
Hardness Of Tread	87±5° Shore A
Load Capacity (Dynamic)	419lbs
Load Capacity (Static)	628lbs
Temperature	-4°F to +158°F
Electrical Conductivity	N/A
Anti-Static	N/A
Weight	1.2lbs
Standard	ISO22883

Advantages at a glance

Rolling Resistance	●●●●●
Operating Noise	●●●●●
Floor Surface Preservation	●●●●●

2D Dimensional Drawing of Single Wheel

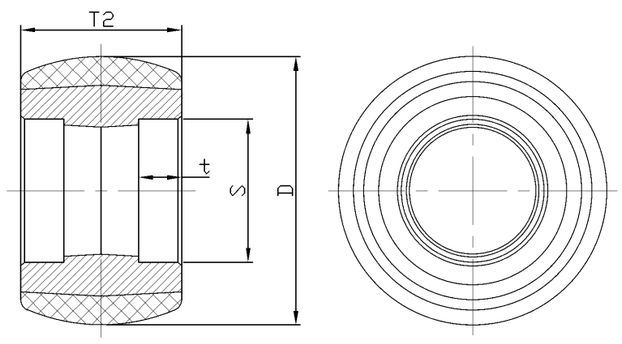

* For any deviation between metric and imperial spec, please refer to the metric spec.

© Copyright 2026 DershengInternational www.dersheng.com