VQPU Series

Wheel Diameter × Wheel Width 250 x 62mm

EAN

YJ-12035410256101

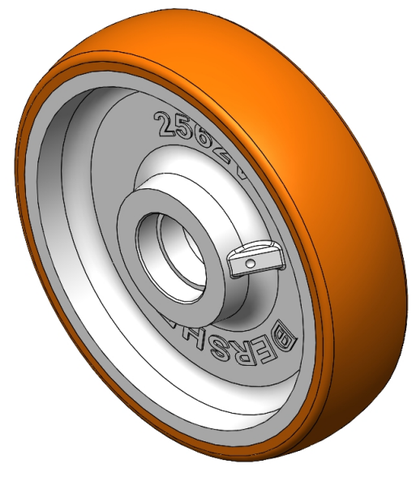

Picture may differ from original product

It has good elasticity, reduces pushing resistance, improves machine tool operability, and has good wear resistance.
It has excellent Hydrolysis Resistance.
Suitable for tropical regions and humid working environments.
QPU, brown, Wheel Tread profile: Crown

Wheel Center: cast iron core

Wheel Tread: High-quality polyurethane

Bearings: —

Drawings are for reference only and may differ from the product

Technical Data

◉ Metric ○ Imperial

Wheel Diameter(D)	250mm
Wheel Width(T2)	62mm
Wheel Bearing	Without Bearing
Axle Bore(d)	—
Axle Bore(S)	52mm
Bearing Bore Depth(t)	15mm
Hub Lenth(T1)	61mm
Hardness Of Tread	92±5° Shore A
Load Capacity (Dynamic)	1500kgs
Load Capacity (Static)	2250kgs
Temperature	-20°C to +70°C
Electrical Conductivity	N/A
Anti-Static	N/A
Weight	7.82kgs
Standard	ISO22883

Advantages at a glance

Rolling Resistance	● ● ● ● ●
Operating Noise	● ● ● ● ●
Floor Surface Preservation	● ● ● ● ●

2D Dimensional Drawing of Single Wheel

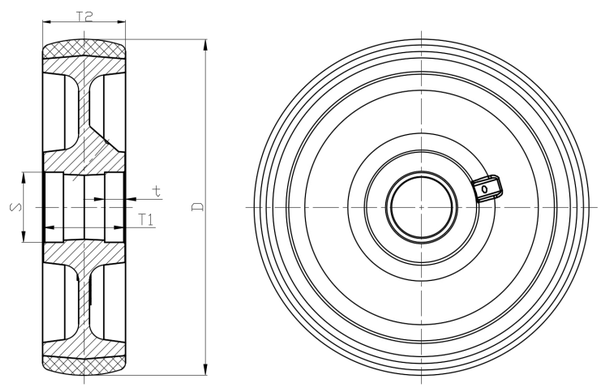

* For any deviation between metric and imperial spec, please refer to the metric spec.

© Copyright 2026 DershengInternational www.dersheng.com