VQPU Series

Wheel Diameter × Wheel Width 250 x 62mm

EAN

YJ-12035410256101

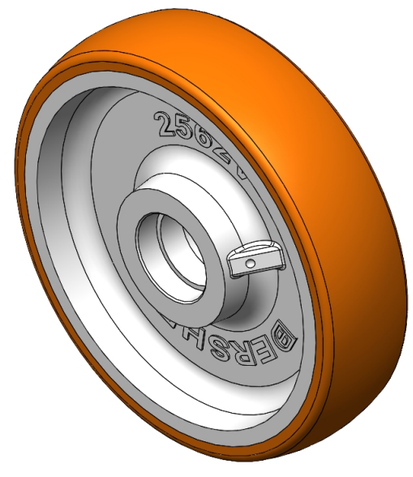

Picture may differ from original product

It has good elasticity, reduces pushing resistance, improves machine tool operability, and has good wear resistance.
It has excellent Hydrolysis Resistance.
Suitable for tropical regions and humid working environments.
QPU, brown, Wheel Tread profile: Crown

Wheel Center: cast iron core

Wheel Tread: High-quality polyurethane

Bearings: —

Drawings are for reference only and may differ from the product

Technical Data

◉ Imperial ○ Metric

Wheel Diameter(D)	10 "
Wheel Width(T2)	2-1/2 "
Wheel Bearing	Without Bearing
Axle Bore(d)	—
Axle Bore(S)	1-15/16 "
Bearing Bore Depth(t)	5/8 "
Hub Lenth(T1)	2-7/16 "
Hardness Of Tread	92±5° Shore A
Load Capacity (Dynamic)	3307lbs
Load Capacity (Static)	4960lbs
Temperature	-4°F to +158°F
Electrical Conductivity	N/A
Anti-Static	N/A
Weight	17.2lbs
Standard	ISO22883

Advantages at a glance

Rolling Resistance	● ● ● ● ●
Operating Noise	● ● ● ● ●
Floor Surface Preservation	● ● ● ● ●

2D Dimensional Drawing of Single Wheel

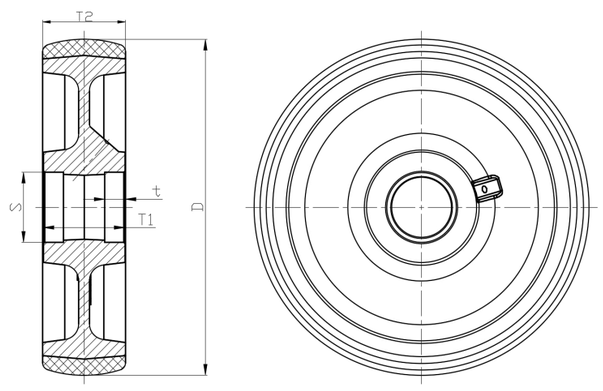

* For any deviation between metric and imperial spec, please refer to the metric spec.

© Copyright 2026 DershengInternational www.dersheng.com