AQPU Series

Wheel Diameter × Wheel Width 59 x 33mm

YJ-12036002135171



Picture may differ from original product

Drawings are for reference only and may differ from the product

Technical Data

◉ Metric ○ Imperial

Wheel Diameter(D)	59mm
Wheel Width(T2)	33mm
Wheel Bearing	Without Bearing
Axle Bore(d)	10.3mm
Axle Bore(S)	—
Bearing Bore Depth(t)	—
Hub Lenth(T1)	41.5mm
Hardness Of Tread	77±5° Shore A
Load Capacity (Dynamic)	80kgs
Load Capacity (Static)	120kgs
Temperature	-20°C to +70°C
Electrical Conductivity	N/A
Anti-Static	N/A
Weight	0.20kgs
Standard	ISO22883

Advantages at a glance

Rolling Resistance	●●●●●
Operating Noise	●●●●●
Floor Surface Preservation	●●●●●

2D Dimensional Drawing of Single Wheel

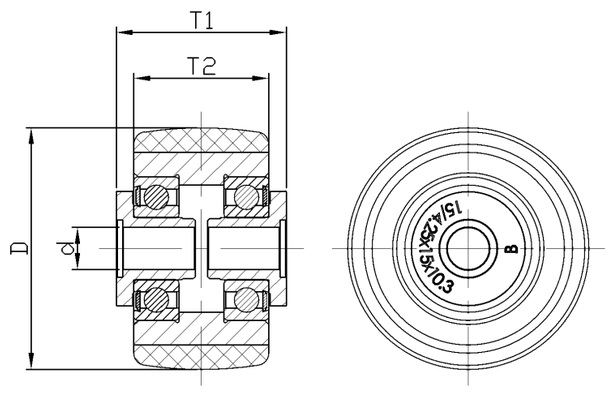

* For any deviation between metric and imperial spec, please refer to the metric spec.

© Copyright 2026 DershengInternational www.dersheng.com