# AQPU Series

Wheel Diameter × Wheel Width 59 x 33mm

YJ-12036002135171



Picture may differ from original product

Drawings are for reference only and may differ from the product

## Technical Data

◉ Imperial ○ Metric

| | |
|---|---|
| Wheel Diameter(D) | 2-3/8 |
| Wheel Width(T2) | 1-5/16 |
| Wheel Bearing | Without Bearing |
| Axle Bore(d) | 13/32 " |
| Axle Bore(S) | — |
| Bearing Bore Depth(t) | — |
| Hub Lenth(T1) | 1-11/16 " |
| Hardness Of Tread | 77±5° Shore A |
| Load Capacity (Dynamic) | 176lbs |
| Load Capacity (Static) | 265lbs |
| Temperature | -4°F to +158°F |
| Electrical Conductivity | N/A |
| Anti-Static | N/A |
| Weight | 0.4lbs |
| Standard | ISO22883 |

## Advantages at a glance

| | |
|---|---|
| Rolling Resistance | ●●●●● |
| Operating Noise | ●●●●● |
| Floor Surface Preservation | ●●●●● |

## 2D Dimensional Drawing of Single Wheel

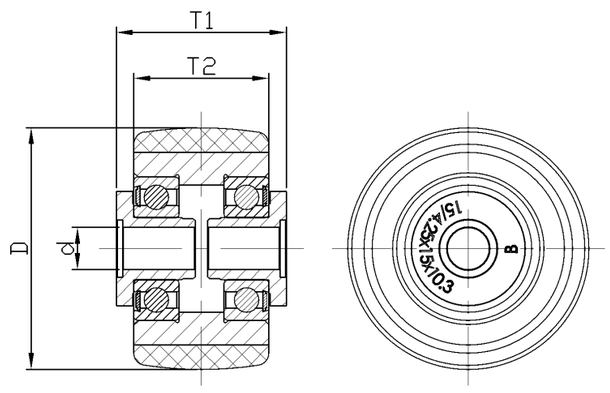


* For any deviation between metric and imperial spec, please refer to the metric spec.

© Copyright 2026 DershengInternational www.dersheng.com