AQPU Series

Wheel Diameter × Wheel Width 75 x 30mm

YJ-12036003135700

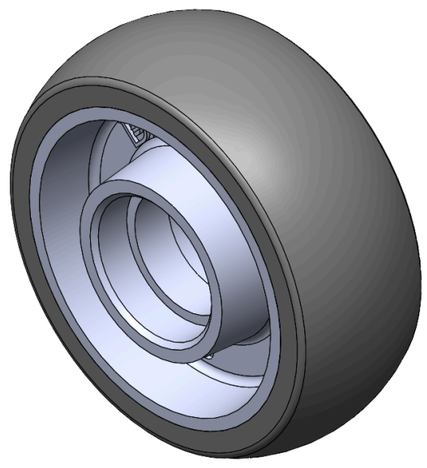

Picture may differ from original product

Drawings are for reference only and may differ from the product

Technical Data

◉ Imperial ○ Metric

Wheel Diameter(D)	3 "
Wheel Width(T2)	1-3/16 "
Wheel Bearing	Without Bearing
Axle Bore(d)	—
Axle Bore(S)	1-1/8 "
Bearing Bore Depth(t)	3/8 "
Hub Lenth(T1)	1-5/16 "
Hardness Of Tread	77±5° Shore A
Load Capacity (Dynamic)	353lbs
Load Capacity (Static)	529lbs
Temperature	-4°F to +158°F
Electrical Conductivity	N/A
Anti-Static	N/A
Weight	0.4lbs
Standard	ISO22883

Advantages at a glance

Rolling Resistance	●●●●●
Operating Noise	●●●●●
Floor Surface Preservation	●●●●●

2D Dimensional Drawing of Single Wheel

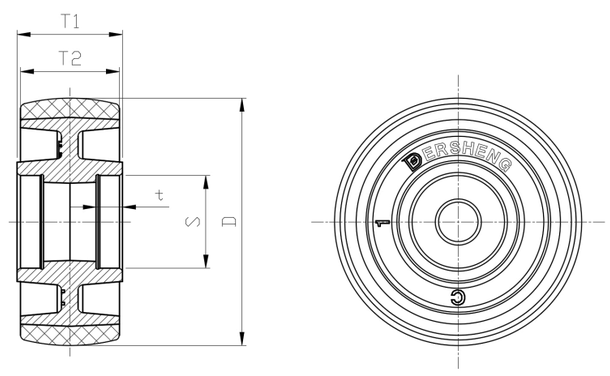

* For any deviation between metric and imperial spec, please refer to the metric spec.

© Copyright 2026 DershengInternational www.dersheng.com