XPU Series

Wheel Diameter × Wheel Width 230 x 70mm

EAN

YJ-12036109286201



Picture may differ from original product

Product descriptions are for reference only. The actual product shall prevail.

Technical Data

◉ Metric ○ Imperial

Wheel Diameter（D）	230mm
Wheel Width（T2）	70mm
Wheel installation — Hub Lenth (T1)	82mm
Wheel center-bore diameter (d)	45mm
Wheel Mounting Bolt Hole PCD Diameter	14mm
Wheel Mounting Bolt Hole PCD	70mm
# Of Wheel mounting bolt boles	5
Wheel mounting bolt hole (M)	10
Number of wheel mounting bolt holes	3
Load Capacity (Static)	2100kgs
Load Capacity at 4 km/h	1400kgs
Load Capacity at 6 km/h	1190kgs
Load Capacity at 10 km/h	980kgs
Load Capacity at 16 km/h	560kgs
Hardness Of Tread	92±5° Shore A
Temperature	-20°C to +70°C
Tread Pattern	—
Wheel centre/ rim	
Non-Marking	Y
Conductive	N/A
Anti	N/A
Weight	5.14kgs
Standard	ISO22883

Advantages at a glance

Rolling Resistance	●●●●●
Operating Noise	●●●●●
Floor Surface Preservation	●●●●○

2D Dimensional Drawing of Drive Wheel

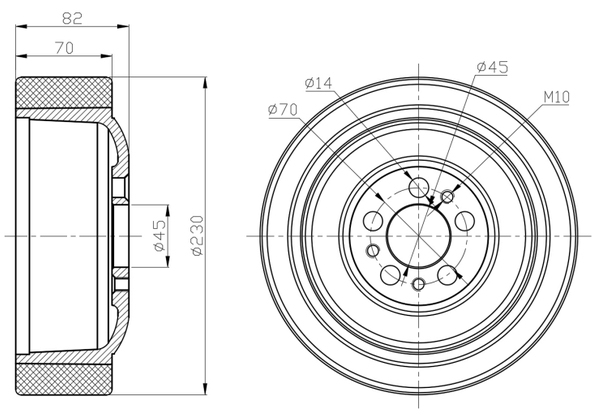

* For any deviation between metric and imperial spec, please refer to the metric spec.

© Copyright 2026 DershengInternational www.dersheng.com