QPU Series

Wheel Diameter × Wheel Width 200 × 50 mm

EAN

YJ-12036308206101

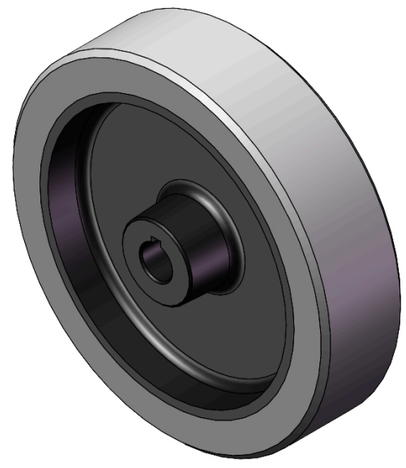

Picture may differ from original product

Product descriptions are for reference only. The actual product shall prevail.

Technical Data

◉ Imperial ○ Metric

Wheel Diameter（D）	8 "
Wheel Width（T2）	2 "
Wheel installation — Hub Lenth (T1)	1-15/16 "
Wheel Mounting Bore Diameter	3/4 "
Keyway Width	1/4 "
Wheel Keyway Depth (H)	22.6
輪子安裝固定螺絲孔(M)	—
輪子安裝固定螺絲孔數量	—
Load Capacity (Static)	1786lbs
Load Capacity at 4 km/h	1190lbs
Load Capacity at 6 km/h	1012lbs
Load Capacity at 10 km/h	833lbs
Load Capacity at 16 km/h	476lbs
Hardness Of Tread	77±5° Shore A
Temperature	-4°F to +158°F
Tread Pattern	—
Wheel centre/ rim	
Non-Marking	Y
Conductive	N/A
Anti	N/A
Weight	7.1lbs
Standard	ISO22883

Advantages at a glance

Rolling Resistance	●●●●●
Operating Noise	●●●●●
Floor Surface Preservation	●●●●●

2D Dimensional Drawing of Drive Wheel

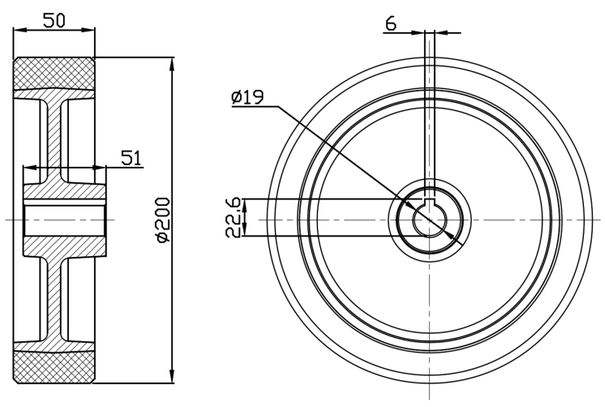

* For any deviation between metric and imperial spec, please refer to the metric spec.

© Copyright 2026 DershengInternational www.dersheng.com