QPU Series

Wheel Diameter × Wheel Width 200 x 60mm

EAN

YJ-12036308230103

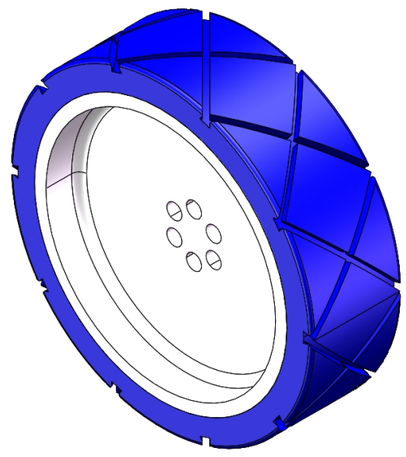

Picture may differ from original product

Good elasticity, reduces pushing resistance, improves machine controllability, and has good wear resistance.
Excellent Hydrolysis Resistance.
Suitable for tropical regions and humid working environments.
QPU blue, machined diamond texture.
Increases grip on the ground, effectively improving anti-slip ability.

Wheel Center: Iron core

Wheel Tread: High-quality polyurethane

Product descriptions are for reference only. The actual product shall prevail.

Technical Data

◉ Metric ○ Imperial

Wheel Diameter（D）	200mm
Wheel Width（T2）	60mm
Wheel installation — Hub Lenth (T1)	13mm
Wheel center-bore diameter (d)	—
Wheel Mounting Bolt Hole PCD Diameter	5.5mm
Wheel Mounting Bolt Hole PCD	30mm
# Of Wheel mounting bolt boles	6
Wheel mounting bolt hole (M)	—
Number of wheel mounting bolt holes	—
Load Capacity (Static)	960kgs
Load Capacity at 4 km/h	640kgs
Load Capacity at 6 km/h	544kgs
Load Capacity at 10 km/h	448kgs
Load Capacity at 16 km/h	256kgs
Hardness Of Tread	87±5° Shore A
Temperature	-20°C to +70°C
Tread Pattern	diamond pattern
Wheel centre/ rim	Iron core/galvanized
Non-Marking	Y
Conductive	N/A
Anti	N/A
Weight	4.44kgs
Standard	ISO22883

Advantages at a glance

Rolling Resistance	● ● ● ● ●
Operating Noise	● ● ● ● ●
Floor Surface Preservation	● ● ● ● ●

2D Dimensional Drawing of Drive Wheel

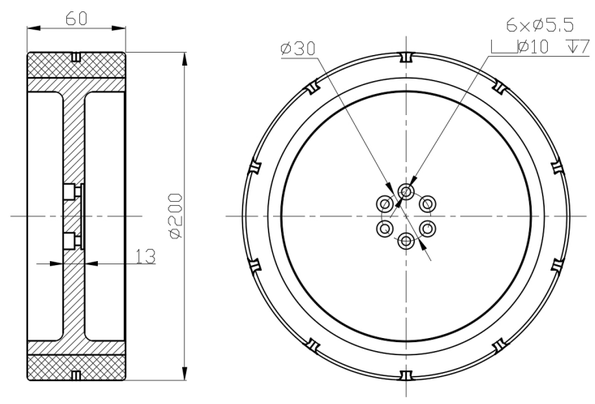

* For any deviation between metric and imperial spec, please refer to the metric spec.

© Copyright 2025 DershengInternational www.dersheng.com